brother®

Laser Printer

SERVICE MANUAL

MODEL:

HL-5340D/5340DL/5350DN/5350DNLT
HL-5370DW/5370DWT/5380DN

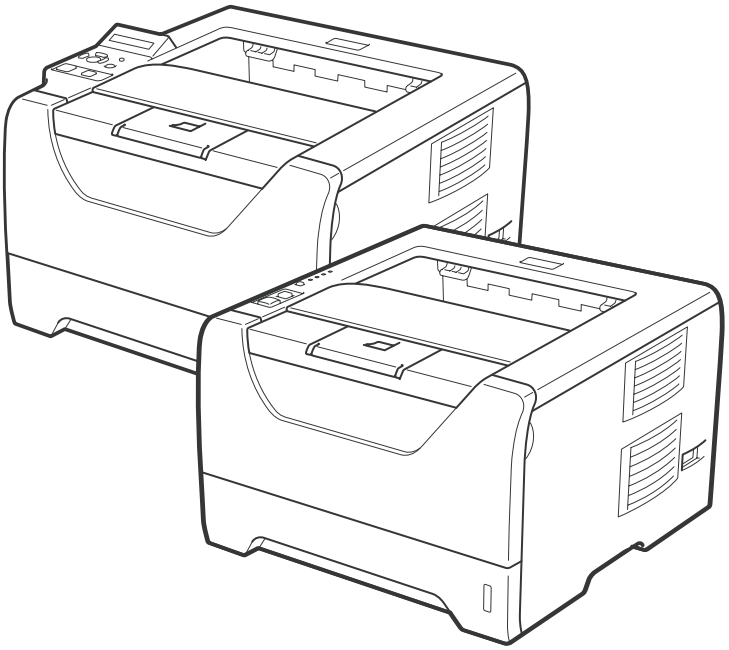

Read this manual thoroughly before maintenance work.
Keep this manual in a convenient place for quick and easy reference at all times.

December 2008
SM-PRN072 (7)

Confidential

TRADEMARKS

The Brother logo is a registered trademark of Brother Industries, Ltd.
Apple and Macintosh are trademarks of Apple Inc., registered in the United States and other countries.
PCL is either a trademark or a registered trademark of Hewlett-Packard Company in the United States and other countries.
Windows Vista is either a registered trademark or a trademark of Microsoft Corporation in the United States and/or other countries.
Microsoft, Windows, Windows Server and Internet Explorer are registered trademarks of Microsoft Corporation in the United States and/or other countries.
Linux is a registered trademark of Linus Torvalds in the United States and other countries.
PostScript and PostScript3 are either registered trademarks or trademarks of Adobe Systems Incorporated in the United States and/or other countries.
ENERGY STAR is a U.S. registered mark.
Citrix and MetaFrame are registered trademarks of Citrix Systems, Inc. in the United States.
Intel, Intel Xeon and Pentium are trademarks or registered trademarks of Intel Corporation.
AMD, AMD Athlon, AMD Opteron and combinations thereof, are trademarks of Advanced Micro Devices, Inc.
PictBridge is a trademark.
Each company whose software title is mentioned in this manual has a Software License Agreement specific to its proprietary programs.
All other trademarks are the property of their respective owners.

© Copyright Brother 2009

All rights reserved.
No part of this publication may be reproduced in any form or by any means without permission in writing from the publisher.
All other product and company names mentioned in this manual are trademarks or registered trademarks of their respective holders.
Specifications are subject to change without notice.

The function comparative table for models as described in this Service Manual are shown blow.

Model	HL-5340D/5340DL	HL-5350DN	HL-5350DNLT	HL-5370DW	HL-5370DWT	HL-5380DN
Panel display	LED	LED	LED	LED	LED	LCD
Network	N/A	Wired	Wired	Wired/ Wireless	Wired/ Wireless	Wired
Lower Tray	N/A	N/A	Yes	N/A	Yes	N/A
Ethernet 10/100 BASE-TX	N/A	Yes	Yes	Yes	Yes	Yes

PREFACE

This service manual contains basic information required for after-sales service of the laser printer (hereinafter referred to as "this machine" or "the printer"). This information is vital to the service technician to maintain the high printing quality and performance of the printer.

This service manual covers the **HL-5340D/5340DL/5350DN/5350DNLT/5370DW/5370DWT/5380DN** printers.

This manual consists of the following chapters:

CHAPTER 1: SPECIFICATIONS

Provides specifications of each model, which enables you to make a comparison of the different models.

CHAPTER 2: THEORY OF OPERATION

Gives an overview of the printing mechanisms as well as the sensors, actuators, and control electronics. It aids in understanding the basic principles of operations as well as locating defects for troubleshooting.

CHAPTER 3: ERROR INDICATION AND TROUBLESHOOTING

Details of error messages and codes that the incorporated self-diagnostic function of the machine will display if any error or malfunction occurs. If any error message appears, refer to this chapter to find which parts should be checked or replaced.

The latter half of this chapter provides sample problems that could occur in the main sections of the machine and related troubleshooting procedures.

CHAPTER 4: PERIODICAL MAINTENANCE

Details of consumable parts and periodical maintenance parts. This chapter also covers procedures for disassembling and assembling periodical maintenance parts.

CHAPTER 5: DISASSEMBLY/REASSEMBLY

Details of procedures for disassembling and assembling of the machine together with related notes. The disassembly order flow provided enables you to see at a glance the quickest way to get to parts involved.

At the start of a disassembly job, you can check the disassembly order flow that guides you through a shortcut to get to the object parts.

This chapter also covers screw tightening torques and lubrication points to which the specified lubrications should be applied during assembly jobs.

CHAPTER 6: ADJUSTMENTS AND UPDATING OF SETTINGS, REQUIRED AFTER PARTS REPLACEMENT

Details of adjustments and updating of settings, which are required if the main PCB and some other parts have been replaced. This chapter also covers how to update the firmware.

CHAPTER 7: SERVICE MODE

Describes the maintenance mode which is exclusively designed for the purpose of checking the settings and adjustments using the keys on the panel.

This chapter also covers hidden function menus, which activate settings and functions or reset the parts life.

CHAPTER 8: CIRCUIT DIAGRAMS, WIRING DIAGRAM

Provides the Circuit Diagrams and Wiring diagram for the connections of the PCBs.

APPENDIX 1: FIRMWARE SWITCHES (WSW)

APPENDIX 2: DELETION OF USER SETTING INFORMATION, etc.

Provides instructions on how to delete user setting information, etc recorded in the machine.

APPENDIX 3: SERIAL NUMBERING SYSTEM

APPENDIX 4: SCREW CATALOGUE

APPENDIX 5: REFERENCES

APPENDIX 6: GLOSSARY

Information in this manual is subject to change due to improvement or redesign of the product. All relevant information in such cases will be supplied in service information bulletins (Technical Information).

A thorough understanding of this printer, based on information in this service manual and service information bulletins, is required for maintaining its print quality performance and for improving the practical ability to find the cause of problems.

REGULATION

For Europe and Other countries

■ Radio interference (220 to 240 volt model only)

This machine follows EN55022 (CISPR Publication 22)/Class B.

Before you use this product, make sure that you use one of the following interface cables.

(1) A shielded parallel interface cable with twisted-pair conductors and that it is marked IEEE 1284 compliant.

(2) A USB cable.

The cable must not be more than 2 meters long.

■ IEC 60825-1 specification (220 to 240 volt model only)

This machine is a Class 1 laser product as defined in IEC 60825-1 specifications. The label shown below is attached in countries where it is needed.

This machine has a Class 3B laser diode which produces invisible laser radiation in the laser unit. You should not open the laser unit under any circumstances.

Caution

Use of controls or adjustments or performance of procedures other than those specified in this manual may result in hazardous radiation exposure.

For Finland and Sweden

LUOKAN 1 LASERLAITE

KLASS 1 LASER APPARAT

Varoitus!

Laitteen käyttäminen muulla kuin tässä käyttöohjeessa mainitulla tavalla saattaa altistaa käyttäjän turvallisuusluokan 1 ylittävälle näkymättömälle lasersäteilylle.

Varning

Om apparaten används på annat sätt än i denna Bruksanvisning specificerats, kan användaren utsättas för osynlig laserstrålning, som överskrider gränsen för laserklass 1.

■ Internal laser radiation

Maximum radiation power:	5 mW
Wave length:	770 - 810 nm
Laser class:	Class 3B

■ EU Directive 2002/96/EC and EN50419

(European Union only)

This equipment is marked with the above recycling symbol. It means that at the end of the life of the equipment you must dispose of it separately at an appropriate collection point and not place it in the normal domestic unsorted waste stream. This will benefit the environment for all. (European Union only)

Confidential

For USA and Canada

■ Federal Communications Commission (FCC) Declaration of Conformity (For USA)

Responsible Party:	Brother International Corporation 100 Somerset Corporate Boulevard P.O. Box 6911 Bridgewater, NJ 08807-0911 USA Telephone: (908) 704-1700

declares, that the products

Product name:	Laser Printer HL-5340D, 5340DL, HL-5350DN, HL-5350DNLT, HL-5370DW, HL-5370DWT, HL-5380DN
Model number:	HL-53
Product option:	Lower Tray Unit LT-5300

complies with Part 15 of the FCC Rules. Operation is subject to the following two conditions: (1) This device may not cause harmful interference, and (2) this device must accept any interference received, including interference that may cause undesired operation.

This equipment has been tested and found to comply with the limits for a Class B digital device, pursuant to Part 15 of the FCC Rules. These limits are designed to provide reasonable protection against harmful interference in a residential installation. This equipment generates, uses, and can radiate radio frequency energy and, if not installed and used in accordance with the instructions, may cause harmful interference to radio communications. However, there is no guarantee that interference will not occur in a particular installation. If this equipment does cause harmful interference to radio or television reception, which can be determined by turning the equipment off and on, the user is encouraged to try to correct the interference by one or more of the following measures:

- Reorient or relocate the receiving antenna.
- Increase the separation between the equipment and receiver.
- Connect the equipment into an outlet on a circuit different from that to which the receiver is connected.
- Consult the dealer or an experienced radio/TV technician for help.

Important

A shielded interface cable should be used to ensure compliance with the limits for a Class B digital device. Changes or modifications not expressly approved by Brother Industries, Ltd. could void the user's authority to operate the equipment.

■ Industry Canada Compliance Statement (For Canada)

This Class B digital apparatus complies with Canadian ICES-003.

Cet appareil numérique de la classe B est conforme à la norme NMB-003 du Canada.

■ Laser Safety (110 to 120 volt model only)

This machine is certified as a Class 1 laser product under the U.S. Department of Health and Human Services (DHHS) Radiation Performance Standard according to the Radiation Control for Health and Safety Act of 1968. This means that the machine does not produce hazardous laser radiation.

Since radiation emitted inside the machine is completely confined within protective housings and external covers, the laser beam cannot escape from the machine during any phase of user operation.

■ FDA Regulations (110 to 120 volt model only)

The U.S. Food and Drug Administration (FDA) has implemented regulations for laser products manufactured on and after August 2, 1976. Compliance is mandatory for products marketed in the United States. The following label on the back of the machine indicates compliance with the FDA regulations and must be attached to laser products marketed in the United States.

MANUFACTURED:

Brother Technology (Shenzhen) Ltd.
NO6 Gold Garden Ind., Nanling Buji, Longgang, Shenzhen, China
This product complies with FDA performance standards for laser products except for deviations pursuant to Laser Notice No.50, dated July 26, 2001.

■ Internal laser radiation

Maximum radiation power:	5 mW
Wave length:	770 - 810 nm
Laser class:	Class 3B

SAFETY INFORMATION

■ Caution for Laser Product (WARNHINWEIS fur Laser drucker)

CAUTION: When the machine during servicing is operated with the cover open, the regulations of VBG 93 and the performance instructions for VBG 93 are valid.

CAUTION: In case of any trouble with the laser unit, replace the laser unit itself. To prevent direct exposure to the laser beam, do not try to open the enclosure of the laser unit.

ACHTUNG: Im Falle von Störungen der Lasereinheit muß diese ersetzt werden. Das Gehäuse der Lasereinheit darf nicht geöffnet werden, da sonst Laserstrahlen austreten können.

<Location of the laser beam window>

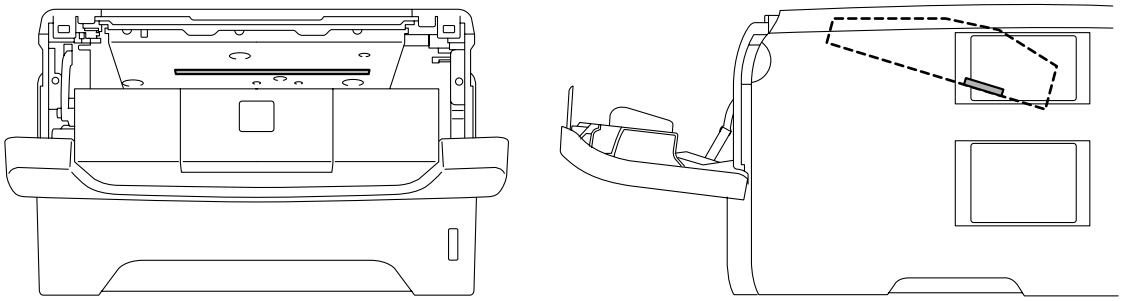

■ Additional Information

When servicing the optical system of the printer, be careful not to place a screwdriver or other reflective object in the path of the laser beam. Be sure to take off any personal accessories such as watches and rings before working on the printer. A reflected beam, though invisible, can permanently damage the eyes.

Since the beam is invisible, the following caution label is attached on the laser unit.

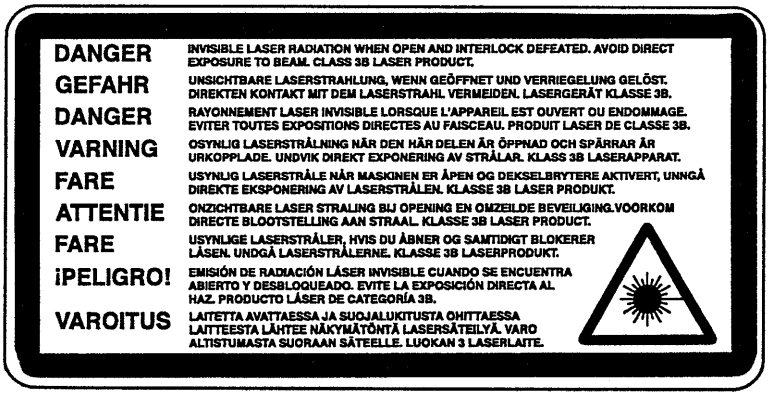

Confidential

■ Definitions of Warnings, Cautions and Notes

The following conventions are used in this service manual:

Mark	Contents
⚠	Warnings tell you what to do to prevent possible personal injury.
⚠	Electrical Hazard icons alert you to a possible electrical shock.
⚠	Hot Surface icons warn you not to touch machine parts that are hot.
❗	Cautions specify procedures you must follow or avoid to prevent possible damage to the machine or other objects.
Note	Note tells you useful tips when servicing the machine.
Memo	Memo tells you bits of knowledge to help understand the machine.

⚠ *WARNING*

Indicates warnings that must be observed to prevent possible personal injury.

❗ CAUTION:

Indicates cautions that must be observed to service the printer properly or prevent damage to the printer.

Note :

- Indicates notes and useful tips to remember when servicing the printer.

** Listed below are the various kinds of "WARNING" messages included in this manual

.

⚠ *WARNING*

Always turn off the power switch and unplug the power cord from the power outlet before accessing any parts inside the printer.

⚠ *WARNING*

Some parts inside the printer are extremely hot immediately after the printer is used. When opening the front cover or back cover to access any parts inside the printer, never touch the shaded parts shown in the following figures.

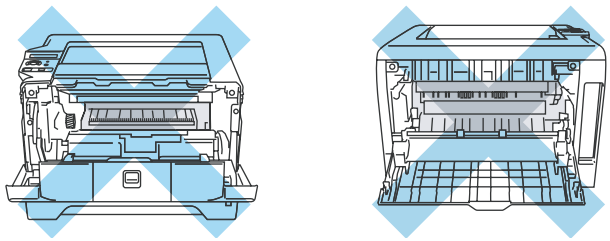

WARNING

If you analyze malfunctions with the power plug inserted into the power outlet, special caution should be exercised even if the power switch is OFF because it is a single pole switch.

WARNING

DO NOT use flammable substances, any type of spray or any organic solvent/liquids contains alcohol or ammonia to clean the inside or outside of the machine.
Doing this may cause a fire or electrical shock.

CHAPTER 1

SPECIFICATIONS

CHAPTER 1
SPECIFICATIONS

This chapter lists the specifications of each model, which enables you to make a comparison of different models.

CONTENTS

1. COMPONENTS 1-1

2. SPECIFICATIONS LIST 1-2

2.1 Printing 1-2

2.2 Functions 1-3

2.3 Electronics and Mechanics 1-5

2.4 Network Connectivity 1-6

2.5 Service Information 1-8

2.6 Paper 1-9

2.6.1 Paper handling 1-9

2.6.2 Media specifications 1-10

2.6.3 Type and size of paper 1-10

2.7 Printable Area 1-12

2.8 Print Speeds with Various Settings 1-18

1. COMPONENTS

The equipment consists of the following major components:

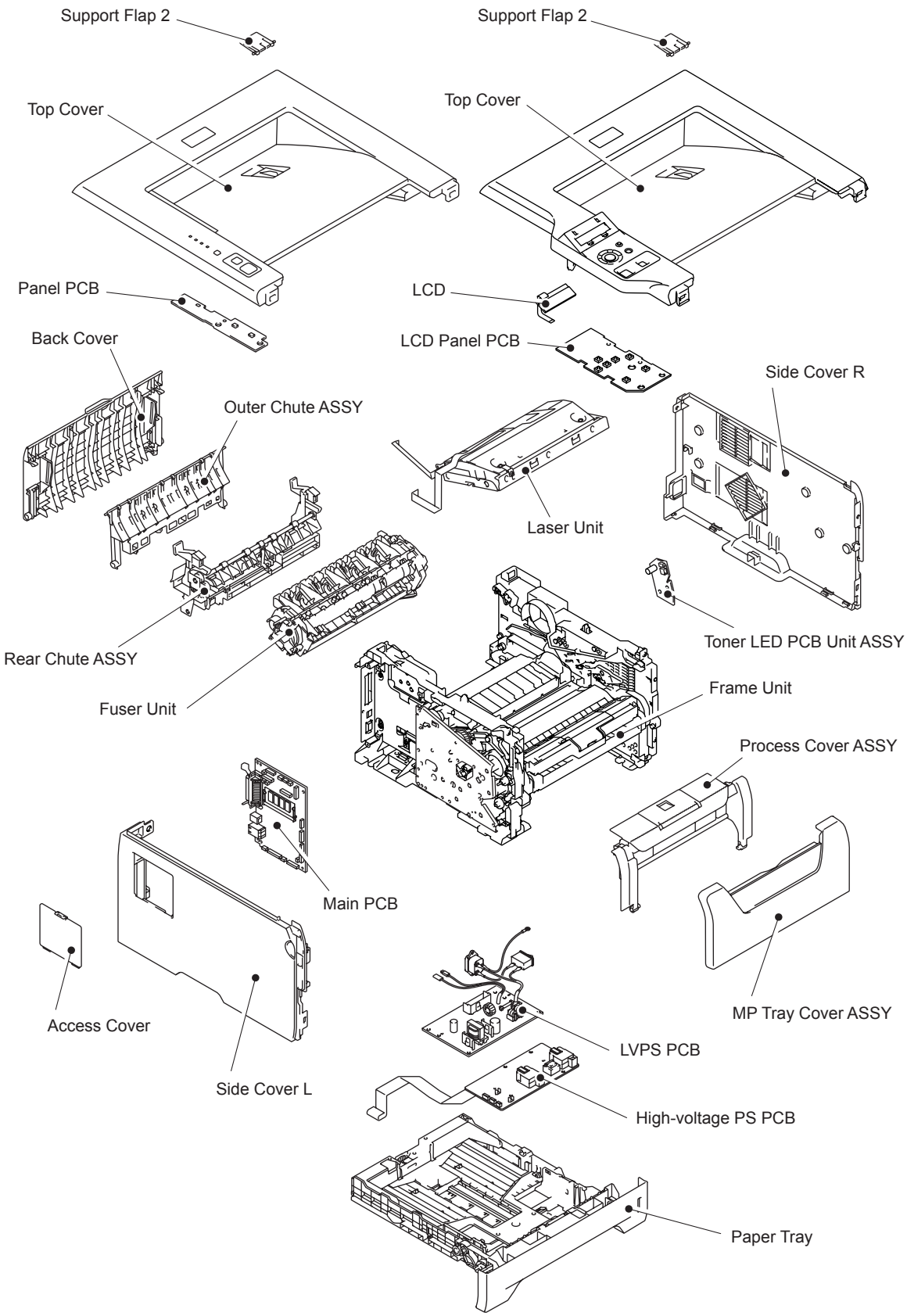

Fig. 1-1

Confidential

2. SPECIFICATIONS LIST

2.1 Printing

Model		HL-5340D HL-5340DL	HL-5350DN HL-5350DNLT	HL-5370DW HL-5370DWT	HL-5380DN
Print method		Electrophotography by semiconductor laser beam scanning			
Laser		Method: 1 polygon motor, 1 laser beam Wavelength: 770 nm - 810 nm Output: 5 mW (Max) Laser class: Class3 B			
Resolution	1200 dpi *1, HQ1200 (2400x600dpi)	Windows® 2000/XP/ XP Professional x64 Edition, Windows Vista®, Windows Server® 2003/ Windows Server® 2003 x 64 Edition, Windows Server® 2008, Mac OS® X 10.3.9 or greater, Linux			
	600 x 600 dpi	Windows® 2000/XP/ XP Professional x64 Edition, Windows Vista®, Windows Server® 2003/ Windows Server® 2003 x 64 Edition/ Windows Server® 2008, Mac OS® X 10.3.9 or greater, DOS, Linux			
Print mode		Normal printing mode Economy printing mode (Toner saving mode)			
Print Speed (A4/Letter)	Standard	Up to 30/32 ppm * When loading A4 or Letter-size paper from the standard paper tray.			
	Duplex	A4: Up to 13 sides per minute (6.5 sheets per minute)			
		Letter: Up to 14 sides per minute (7 sheets per minute)			
Warm-up time *2		From sleep mode: less than 18 seconds From power off → on: less than 28 seconds			
First print time *2		Less than 8.5 seconds			
Consumables	Toner cartridge	Life expectancy: Starter: 2,000 pages/cartridge (HL-5340DL only) Standard: 3,000 pages/cartridge High-capacity: 8,000 pages/cartridge * When printing A4/Letter-size paper in accordance with ISO/IEC 19752. Shelf life: 2 years without opening (6 months after opening)			
	Drum unit	Life expectancy: 25,000 pages/drum unit Life expectancy will vary depending on number of continuous printing pages. (Refer to CHAPTER 7 1.3 Service Mode "Printing for Maintenance".) * When printing A4/Letter-size paper. Shelf life: 2 years			
	The shelf life mentioned above is guaranteed under the normal condition as below; (Temperature) Normal condition: 0 to 40 °C * Storage condition at the temperature of 40 to 50 °C: Up to 5 days * Storage condition at the temperature of -20 to 0 °C: Up to 5 days (Humidity) Normal condition: 35 to 85 % * Storage condition at the humidity of 85 to 95 %: Up to 5 days * Storage condition at the humidity of 10 to 35 %: Up to 5 days				

*1 Using 1200 dpi setting (1200 x 1200 dpi) the print speed will be slower.

*2 The time may change if the machine is calibrating or registering itself.

Specifications are subject to change without notice.

2.2 Functions

<Controller>

Model		HL-5340D HL-5340DL	HL-5350DN HL-5350DNLT	HL-5370DW HL-5370DWT	HL-5380DN
CPU		300 MHz			
Memory	Standard	16 MB	32 MB		
	Option	1 DIMM slot; expandable up to 528 MB	1 DIMM slot; expandable up to 544 MB		
Interface		IEEE 1284 Parallel, Hi-Speed USB 2.0	IEEE 1284 Parallel, Hi-Speed USB 2.0, Ethernet 10/100 BASE-TX	IEEE 1284 Parallel, Hi-Speed USB 2.0, Ethernet 10/100 BASE-TX, Wireless LAN IEEE 802.11b/g	IEEE 1284 Parallel, Hi-Speed USB 2.0, Ethernet 10/100 BASE-TX
Emulation		PCL6, BR-Script 3 (PostScript® 3™), IBM Proprinter XL, Epson FX-850			
Network Connectivity	Protocol	N/A	TCP/IP(10/100 BASE-TX Ethernet)		
	Management tool	N/A	BRAdmin Light, Web BRAdmin, Web Based Management , BRAdmin Professional 3		
Resident fonts	PCL	66 scalable fonts, 12 bitmap fonts, 13 bar codes			
	BR-Script 3	66 scalable fonts			

<Software>

Model		HL-5340D HL-5340DL	HL-5350DN HL-5350DNLT	HL-5370DW HL-5370DWT	HL-5380DN
Printer driver	Windows®	PCL driver for Windows 2000 Professional, XP Home Edition, XP Professional Edition, XP professional x64 Edition, Server 2003, Server 2003 x64 Edition, Vista, Server 2008			
		BR-Script 3 (PPD file for Windows 2000 Professional, XP Home Edition, XP Professional Edition, XP professional x64 Edition, Server 2003, Server 2003 x64 Edition, Vista, Server 2008)			
	Macintosh®	Macintosh Printer Driver for Mac OS® X 10.3.9 or greater			
		BR-Script 3 (PPD file for Mac OS® X 10.3.9 or greater)			
	Linux *	Linux printer driver for CUPS printing system (x86, x64 environment)			
		Linux printer driver for LPD/LPRng printing system (x86, x64 environment)			
Utility		N/A	Driver Deployment Wizard		

Download from http://solutions.brother.com.

<System requirements>

Computer Platform & Operating System Version		Processor Speed	Minimum RAM	Recom-mended RAM	Available Hard Disk Space
Windows®	Windows Vista®	Intel® Pentium® 4 or equivalent 64-bit supported CPU	512MB	1GB	50MB
	Windows Server® 2003 x64 Edition	AMD Opteron™ AMD Athlon™ 64 Intel® Xeon™ with Intel® EM64T Intel® Pentium® with Intel® EM64T or equivalent	256MB	512MB	50MB
	Windows® XP Professional x64 Edition	AMDOpteron™ AMDAthlon™64 Intel® Xeon® with Intel® EM64T Intel® Pentium® 4 with Intel® EM64T or equivalent	256MB	512MB	50MB
	Windows Server® 2003	Intel® Pentium® III or equivalent	256MB	512MB	50MB
	Windows Server® 2008	Intel® Pentium® 4 or equivalent 64-bit (Intel® 64 or AMD 64) supported CPU	512MB	2GB	50MB
	Windows® XP Home Edition	Intel®Pentium® or equivalent	128MB	256MB	50MB
	Windows® XP Professional				
	Windows® 2000 Professional		64MB	256MB	50MB
Apple® Macintosh®	OS® X 10.3.9 - 10.4.3	Power PC G4/G5, Power PC G3 350MHz	128MB	256MB	80MB
	OS® X 10.4.4 or greater	Power PC G4/G5, Intel® Core™ Processor	512MB	1GB	80MB

Confidential

2.3 Electronics and Mechanics

Model		HL-5340D	HL-5340DL	HL-5350DN	HL-5350DNLT	HL-5370DW	HL-5370DWT	HL-5380DN
Power consumption	Printing	Average 675 W at 25 °C (77 °F)						
	Ready	Average 75 W at 25 °C (77 °F)						
	Sleep	Average 6 W at 25 °C (77 °F)						
Noise level	Sound Pressure	Printing: 54 dB (A) Ready: 35 dB (A)						
	Sound power	Printing: LWAd = 6.9 Bell (A) Ready: LWAd = 4.8 Bell (A)						
Temperature		Operating: 10 to 32.5°C (50 to 90.5 °F) Non operating: 0 to 40°C (38 to 104 °F) Storage: -20 to 40°C (-4 to 104 °F)						
Humidity		Operating: 20 to 80 % (non condensing) Storage: 10 to 85 % (non condensing)						
Dimensions of the main body (WxDxH)		371x384x246mm (14.6x15.1x9.7in.)			371x384x347mm (14.6x15.1x13.7in.)	371x384x246mm (14.6x15.1x9.7in.)	371x384x347mm (14.6x15.1x13.7in.)	393x384x259mm (15.5x15.1x10.2in.)
Weight	the main body with Carton	11.7kg (25.8lb)			19.5kg (42.9lb)	11.7kg (25.8lb)	19.5kg (42.9lb)	11.9kg (26.2lb)
	the main body without Carton	9.5kg (20.9lb)			12.2kg (26.9lb)	9.5kg (20.9lb)	12.2kg (26.9lb)	9.5kg (20.9lb)

2.4 Network Connectivity

<Ethernet wired network>

Network node type	NC-6800h	
Operating system support	Windows Vista®, Windows Server® 2003 x64 Edition, Windows® XP Professional x64 Edition, Windows Server® 2003, Windows® XP Home Edition/Professional, Windows® 2000 Professional, Mac OS® X 10.3.9 or greater	
Protocol support	TCP/IP: IPv4	ARP, RARP, BOOTP, DHCP, APIPA (Auto IP), WINS/NetBIOS name resolution, DNS Resolver, mDNS, LLMNR responder, LPR/LPD, Custom Raw Port/Port9100, IPP/IPPS, FTP Server, TELNET Server, HTTP/HTTPS server, TFTP client and server, SMTP Client, APOP, POP before SMTP, SMTP-AUTH, SNMP v1/v2c/v3, ICMP, LLTD responder, Web Services Print
	TCP/IP: IPv6 *1	NDP, RA, DNS resolver, mDNS, LLMNR responder, LPR/LPD, Custom Raw Port/Port9100, IPP/IPPS, FTP Server, TELNET Server, HTTP/HTTPS server, TFTP client and server, SMTP Client, APOP, POP before SMTP, SMTP-AUTH, SNMPv1/v2c/v3, ICMPv6, LLTD responder, Web Services Print
Network type	10/100 BASE-TX Ethernet network	
Network printing	Windows Vista®, Windows Server® 2003, Windows® XP and Windows® 2000 TCP/IP printing Mac OS® X 10.3.9 or greater printing	

*1 If you want to use the IPv6 protocol, visit http://solutions.brother.com for more information.

Management utility	BRAdmin Professional 3 *2 for Windows (Brother original Windows utility for printer and server management)
	Web BRAdmin *2 for Windows (Server based management utility / Windows IIs (4.0/5.0) mode only)
	Web Based Management (Printer and print server management throuth web browser) recommend Microsoft Internet Explorer 6.0 (or greater), Fire fox 1.0 (or greater) for Windows Safar: 1.2 (or greater) for Macintosh
	BRAdmin Light for Windows and Macintosh

*2 BRAdmin Professional 3 and Web BRAdmin are available as a download from http://solutions.brother.com.

<Wireless network>

Network node type	NC-7600w	
Operating system support	Windows Vista®, Windows Server® 2003 x64 Edition*2, Windows® XP Professional x64 Edition*1, Windows® 2003, Windows® XP, Windows® 2000, Mac OS® X 10.3.9 or greater	
Protocol support	TCP/IP: IPv4	ARP, RARP, BOOTP, DHCP, APIPA (Auto IP), WINS/ NetBIOS name resolution, DNS Resolver, mDNS, LLMNR responder, LPR/LPD, Custom Raw Port/Port9100, IPP/IPPS, FTP Server, TELNET Server, HTTP/HTTPS server, TFTP client and server, SMTP Client, APOP, POP before SMTP, SMTP-AUTH, SNMP v1/v2c/v3, ICMP, LLTD responder, Web Services Print
	TCP/IP: IPv6 *2	NDP, RA, DNS resolver, mDNS, LLMNR responder, LPR/LPD, Custom Raw Port/Port9100, IPP/IPPS, FTP Server, TELNET Server, HTTP/HTTPS server, TFTP client and server, SMTP Client, APOP, POP before SMTP, SMTP-AUTH, SNMPv1/v2c/v3, ICMPv6, LLTD responder, Web Services Print
Network type	IEEE 802.11b/g wireless	
Frequency	2412 - 2472 MHz	
RF channel	US/Canada	1 - 11
	Europe/Oceania	1 - 13
	Japan	1 - 14
Communication mode	Infrastructure, Ad-hoc 802.11 b	
Data rate	802.11 b	11/5.5/2/1 Mbps
	802.11 g	54/48/36/24/18/12/11/9/6 Mbps

*1 A wireless network connection is supported only between the Brother printer and an access point for PC's running Windows Server® 2003 x64 Edition and Windows® XP Professional x64 Edition.

*2 If you want to use the IPv6 protocol, visit http://solutions.brother.com for more information.

Link distance	70 m (233 ft.) at lowest data rate (The distance rate will vary upon environment and other equipment location.)
Network security	WEP 64/128, WPA-PSK (TKIP & AES), WPA2-PSK (AES), LEAP (CKIP), EAP-FAST (TKIP/AES)
Management utility	BRAdmin Professional 3 *3 for Windows (Brother original Windows utility for printer and server management)
	Web BRAdmin *3 for Windows (Server based management utility / Windows IIs (4.0/5.0) mode only)
	Web Based Management
	BRAdmin Light for Windows and Macintosh (Printer and print server management throuth web browser) recommend Microsoft Internet Explorer 6.0 (or greater), Fire fox 1.0 (or greater) for Windows Safar: 1.2 (or greater) for Macintosh

*3 BRAdmin Professional 3 and Web BRAdmin are available as a download from http://solutions.brother.com.

2.5 Service Information

These are key service information to maintain the product.

Machine life: 200,000 pages

MTBF (Meantime between failure): Up to 4000 hours

MTTR (Meantime to repair): Average 0.5 hours

Maximum monthly volume: 30,000 pages

Periodical replacement parts:

Parts		Approximate Life (pages)
Fuser unit		100,000
Laser unit		100,000
PF kit	China	MP: 25,000 Tray 1/2/3: 100,000
	India	MP: 12,000 Tray 1/2/3: 80,000
	Others	MP: 50,000 Tray 1/2/3: 100,000

* As for periodical replacement parts, refer to CHAPTER 4.

2.6 Paper

2.6.1 Paper handling

Model		HL-5340D	HL-5340DL	HL-5350DN	HL-5350DNLT	HL-5370DW	HL-5370DWT	HL-5380DN
Paper Input *1	Standard tray	250 sheets			500 sheets (250 sheets x 2 trays)	250 sheets	500 sheets (250 sheets x 2 trays)	250 sheets
	Multi-purpose tray	50 sheets						
	Option	250 sheets x 2 (Max. 500 sheets)			250 sheets x 1 (Max. 250 sheets)	250 sheets x 2 (Max. 500 sheets)	250 sheets x 1 (Max. 250 sheets)	250 sheets x 2 (Max. 500 sheets)
Paper Output *1	Face-down	150 sheets						
	Face-up	1 sheet						
Duplex Print	Manual	Yes						
	Automatic	Yes						

*1 Calculated with 80 g/m^2 (20 lb) paper.

*2 Not supported for Linux driver and PS driver (except Mac PS driver).

2.6.2 Media specifications

Model		HL-5340D HL-5340DL	HL-5350DN HL-5350DNLT	HL-5370DW HL-5370DWT	HL-5380DN
Media type	Paper tray (Standard)	Plain paper, Bond paper, Recycled paper, Transparencies *3, Thin paper			
	Multi-purpose tray	Plain paper, Thick paper, Bond paper, Recycled paper, Envelope *4, Label, Transparencies *3, Thin paper			
	Optional tray	Plain paper, Bond paper, Recycled paper, Thin paper			
Media weight	Paper tray (Standard/ Option)	60 to 105 g/m^2 (16 to 28 lb)			
	Multi-purpose tray	60 to 163 g/m^2 (16 to 43 lb)			
	Duplex	60 to 105 g/m^2 (16 to 28 lb)			
Media size	Paper tray (Standard/ Option)	U.S.A: A4, Letter, B5 (ISO), A5, A5 (Long Edge), B6 (ISO), Legal*4, Folio, A6, Exective Europe: A4, Letter, B5 (ISO), A5, A5 (Long Edge), B6 (ISO), A6, Executive			
	Multi-purpose tray	Width: 69.8 to 216 mm (2.75 to 8.50 in.) Length: 116 to 406.4 mm (4.57 to 16 in.)			
	Duplex	U.S.A/Canada: Letter, Legal, Folio Europe: A4			

*3 Up to 10 sheets.

*4 Up to 3 sheets.

*5 Legal is not available in some regions outside the USA and Canada.

2.6.3 Type and size of paper

The printer loads paper from the installed paper tray or the multi-purpose tray. The name s for the paper trays in the printer driver as follows;

Paper tray (T1)	Tray 1
Multi-purpose tray	MP tray
Optional lower tray unit	Tray 2/Tray 3
Duplex unit for automatic duplex printing	DX

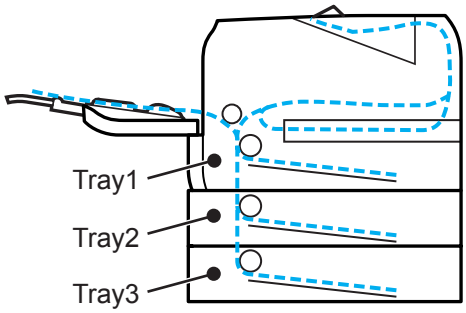

Fig. 1-2

<Media type>

	Tray 1/2/3	MP Tray	DX	Choose the media type from the printer driver
Plain paper 75 to 105 g/m^2 (20 to 28 lb)	Yes	Yes	Yes	**Plain paper**
Recycled paper	Yes	Yes	Yes	**Recycled paper**
Bond paper Rough paper- 60 to 161 g/m^2 (16 to 43 lb)	Yes 60 to105 g/m^2 (16 to 28 lb.)	Yes 60 to161 g/m^2 (16 to 43 lb.)	N/A	**Bond paper**
Thin paper 60 to 75 g/m^2 (16 to 20 lb)	Yes	Yes	Yes	**Thin paper**
Thick paper 105 to 163 g/m^2 (28 to 43 lb)	N/A	Yes	N/A	**Thick Paper or Thicker Paper**
Labels	N/A	Yes A4 or Letter	N/A	**Thicker Paper**
Envelopes	N/A	Yes	N/A	**Envelopes, Env. Thin, Env. Thick**

Memo :

- Use paper that is made for plain-paper copying.
- Use papers that is 75 to 90 g/m2 (20 to 24 lb).
- Use neutral paper. Do not use acidic or alkaline paper.
- Use long-grain paper.
- This printer can use recycled paper that meets DIN 19309 specifications.
- DO NOT use ink jet paper because it may cause a paper jam or damage your printer.

2.7 Printable Area

■ PCL emulation

When using PCL emulation, the edges of the paper that cannot be printed on are shown below.

Portrait

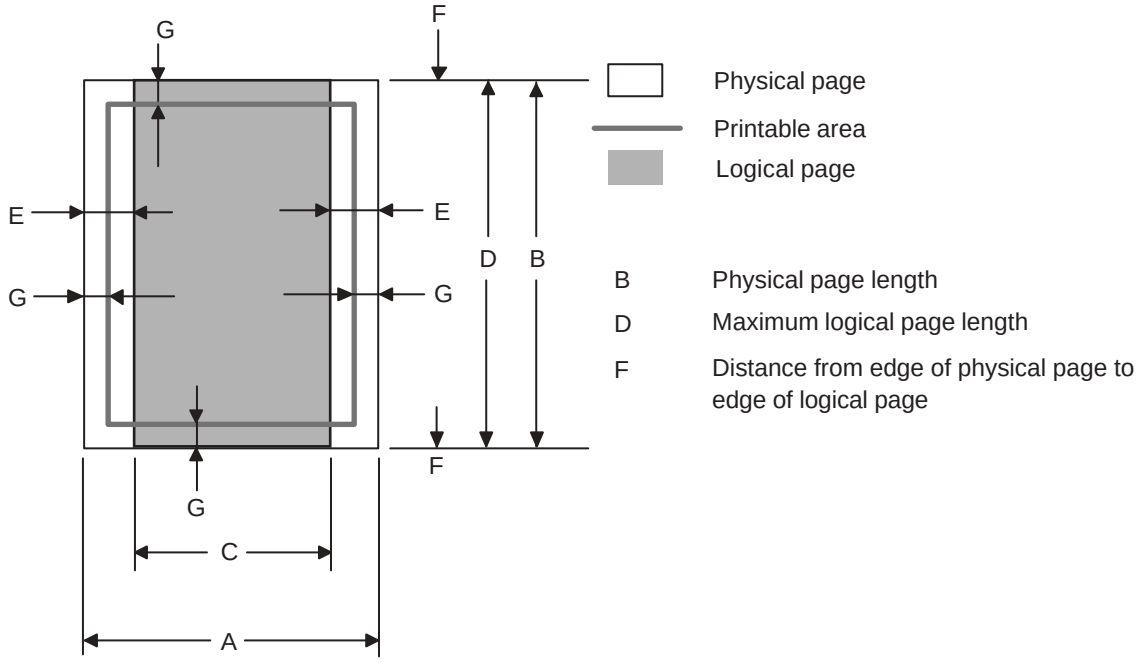

Note :

- "Logical page" shows the printable area for a PCL driver.
- "Printable area" shows mechanical printable area of the machine.
- Therefore, the machine can only print within the shaded area when you use a PCL driver.

Confidential

The table below shows the printable areas when printing on Portrait for each paper size.

Size	A	B	C	D	E	F	G
Letter	215.9mm 8.5" (2,550dots)	279.4mm 11.0" (3,300dots)	203.2mm 8.0" (2,400dots)	279.4mm 11.0" (3,300dots)	6.3mm 0.2" (75dots)	0mm	4.2mm 0.16" (50dots)
Legal	215.9mm 8.5" (2,550dots)	355.6mm 14.0" (4,200dots)	203.2mm 8.0" (2,400dots)	355.6mm 14.0" (4,200dots)	↑	0mm	4.2mm 0.16" (50dots)
Folio	215.9mm 8.5" (2,550dots)	330.2mm 13.0" (3,900dots)	203.2mm 8.0" (2,400dots)	330.2mm 13.0" (3,900dots)	↑	0mm	4.2mm 0.16" (50dots)
Executive	184.15mm 7.25" (2,175dots)	266.7mm 10.5" (3,150dots)	175.7mm 6.92" (2,025dots)	266.7mm 10.5" (3,150 dots)	6.3mm 0.2" (75dots)	0mm	4.2mm 0.16" (50dots)
A 4	210.0mm 8.27" (2,480dots)	297.0mm 11.69" (3,507dots)	198.0mm 7.79" (2,338dots)	297.0mm 11.69" (3,507dots)	6.0mm 0.2" (71dots)	0mm	4.2mm 0.16" (50dots)
A 5	148.5mm 5.85" (1,754dots)	210.0mm 8.27" (2,480dots)	136.5mm 5.37" (1,612dots)	210.0mm 8.27" (2,480dots)	↑	0mm	4.2mm 0.16" (50dots)
A 6	105.0mm 4.13" (1,240dots)	148.5mm 5.85" (1,754dots)	93.0mm 3.66" (1,098dots)	148.5mm 5.85" (1,754dots)	↑	0mm	4.2mm 0.16" (50dots)
B 5 (JIS)	182.0mm 7.1" (2,130dots)	257.0mm 10.11" (3,033dots)	170.0mm 6.69" (2,007dots)	257.0mm 10.11" (3,033dots)	↑	0mm	4.2mm 0.16" (50dots)
B 5 (ISO)	176.0mm 6.93" (2,078dots)	250.0mm 9.84" (2,952dots)	164.0mm 6.46" (1,936dots)	250.0mm 9.84" (2,952dots)	↑	0mm	4.2mm 0.16" (50dots)
B 6 (ISO)	125.0mm 4.92" (1,476dots)	176.0mm 6.93" (2,078dots)	164.0mm 4.44" (1,334dots)	176.0mm 6.93" (2.078dots)	↑	0mm	4.2mm 0.16" (50dots)
Envelope Monarch	98.43mm 3.875" (1,162dots)	190.5mm 7.5" (2,250dots)	85.7mm 3.37" (1,012dots)	190.5mm 7.5" (2,250dots)	6.3mm 0.2" (75dots)	0mm	4.2mm 0.16" (50dots)
Envelope Com-10	104.7mm 4.125" (1,237dots)	241.3mm 9.5" (2,850dots)	92.0mm 3.62" (1,087dots)	241.3mm 9.5" (2,850dots)	↑	0mm	4.2mm 0.16" (50dots)
Envelope DL	110.0mm 4.33" (1,299dots)	220.0mm 8.66" (2,598dots)	98.0mm 3.86" (1,157dots)	220.0mm 8.66" (2,598dots)	6.0mm 0.24" (71dots)	0mm	4.2mm 0.16" (50dots)
Envelope C5	162.0mm 6.38" (1,913dots)	229.0mm 9.01" (2,704dots)	150.0mm 5.9" (1,771dots)	229.0mm 9.01" (2,704dots)	↑	0mm	4.2mm 0.16" (50dots)
HAGAKI	100.0mm 3.94" (1,181dots)	148.0mm 5.83" (1,748dots)	88.0mm 3.46" (1,039dots)	148.0mm 5.83" (1,748dots)	6.0mm 0.24" (71dots)	0mm	4.2mm 0.16" (50dots)
A4 Long	210.0mm 8.27" (2,480dots)	405.0mm 15.94" (4,783dots)	198.0mm 7,79" (2,338dots)	405.0mm 15.94" (4,783dots)	6.0mm 0.24" (71dots)	0mm	4.2mm 0.16" (50dots)

Confidential

Size	A	B	C	D	E	F	G
DL Long Edge	220.0mm 8.66" (2,598dots)	110.0mm 4.33" (1,299dots)	207.0mm 8.17" (2,450dots)	110.0mm 4.33" (1,299dots)	6.26mm 0.25" (74dots)	0mm	4.2mm 0.16" (50dots)
3X5	76.2mm 3.00" (900dots)	127.0mm 5.00" (1,500dots)	63.5mm 2.50" (750dots)	127.0mm 5.00" (1,500dots)	6.35mm 0.25" (75dots)	0mm	4.2mm 0.16" (50dots)

Note :

- The paper sizes indicated here should confirm to the nominal dimensions specified by JIS except B5 (ISO), B6 (ISO).
- The dot size is based on 300dpi resolution.

Confidential

Landscape

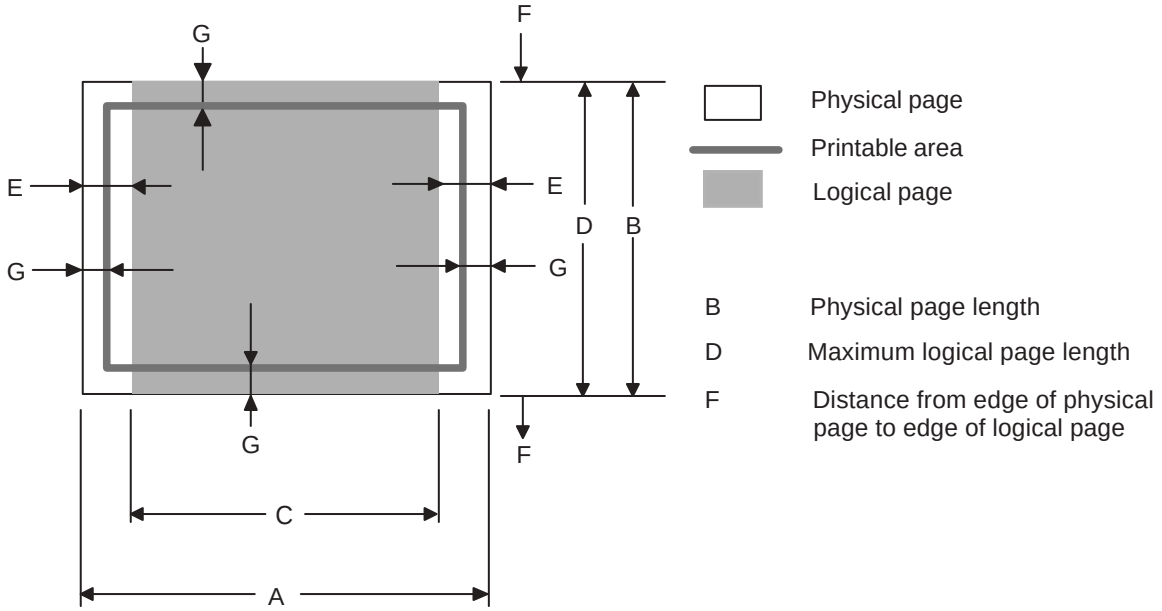

Note :

- "Logical page" shows the printable area for a PCL driver.
- "Printable area" shows mechanical printable area of the machine.
- Therefore, the machine can only print within the shaded area when you use a PCL driver.

Confidential

The table below shows the printable areas when printing on Landscape for each paper size.

Size	A	B	C	D	E	F	G
Letter	279.4mm 11.0" (3,300dots)	215.9mm 8.5" (2,550dots)	269.3mm 10.6" (3,180dots)	215.9mm 8.5" (2,550dots)	5.0mm 0.2" (60dots)	0mm	4.2mm 0.16" (50dots)
Legal	355.6mm 14.0" (4,200dots)	215.9mm 8.5" (2,550dots)	345.5mm 13.6" (4,080dots)	215.9mm 8.5" (2,550dots)	↑	0mm	4.2mm 0.16" (50dots)
Folio	330.2mm 13.0" (3,900 dots)	215.9mm 8.5" (2,550dots)	320.0mm 12.6" (3,780dots)	215.9mm 8.5" (2,550dots)	↑	0mm	4.2mm 0.16" (50dots)
Executive	266.7mm 10.5" (3,150dots)	184.15mm 7.25" (2,175dots)	256.6mm 10.1" (3,030dots)	184.15mm 7.25" (2,175dots)	5.0mm 0.2" (60dots)	0mm	4.2mm 0.16" (50dots)
A 4	297.0mm 11.69" (3,507dots)	210.0mm 8.27" (2,480dots)	287.0mm 11.2" (3,389dots)	210.0mm 8.27" (2,480dots)	4.8mm 0.19" (59dots)	0mm	4.2mm 0.16" (50dots)
A 5	210.0mm 8.27" (2,480dots)	148.5mm 5.85" (1,754dots)	200.0mm 7.87" (2,362dots)	148.5mm 5.85" (1,754dots)	↑	0mm	4.2mm 0.16" (50dots)
A 6	148.5mm 5.85" (1,754dots)	105.0mm 4.13" (1,240dots)	138.5mm 5.45" (1,636dots)	105.0mm 4.13" (1,240dots)	↑	0mm	4.2mm 0.16" (50dots)
B 5 (JIS)	257.0mm 10.11" (3,033dots)	182.0mm 7.1" (2,130dots)	247.0mm 9.72" (2,916dots)	182.0mm 7.1" (2,130dots)	↑	0mm	4.2mm 0.16" (50dots)
B 5 (ISO)	250.0mm 9.84" (2,952dots)	176.0mm 6.93" (2,078dots)	240.0mm 9.44" (2,834dots)	176.0mm 6.93" (2,078dots)	↑	0mm	4.2mm 0.16" (50dots)
B 6 (ISO)	176.0mm 6.93" (2,078dots)	125.0mm 4.92" (1,476dots)	166.4mm 6.55" (1,960dots)	125.0mm 4.92" (1,476dots)	↑	0mm	4.2mm 0.16" (50dots)
Envelope Monarch	190.5mm 7.5" (2,250dots)	98.43mm 3.875" (1,162dots)	180.4mm 7.1" (2,130dots)	98.43mm 3.875" (1,162dots)	5.0mm 0.20" (60dots)	0mm	4.2mm 0.16" (50dots)
Envelope Com-10	241.3mm 9.50" (2,850dots)	104.7mm 4.125" (1,237dots)	231.1mm 9.10" (2,730dots)	104.7mm 4.12" (1,237dots)	↑	0mm	4.2mm 0.16" (50dots)
Envelope DL	220mm 8.66" (2,598dots)	110mm 4.33" (1,299dots)	210.0mm 8.26" (2,480dots)	110mm 4.33" (1,299dots)	4.8mm 0.19" (59dots)	0mm	4.2mm 0.16" (50dots)
Envelope C5	229mm 9.01" (2,704dots)	162mm 6.38" (1,913dots)	219.0mm 8.62" (2,586dots)	162mm 6.38" (1,913dots)	↑	0mm	4.2mm 0.16" (50dots)
HAGAKI	148mm 5.83" (1,748dots)	100mm 3.94" (1,181dots)	138mm 5.43" (1,630dots)	100mm 3.94" (1,181dots)	4.8mm 0.19" (59dots)	0mm	4.2mm 0.16" (50dots)
A4 Long	405mm 15.94" (4,783dots)	210mm 8.27" (2,480dots)	395mm 15.55" (4,665dots)	210mm 8.27" (2,480dots)	4.8mm 0.19" (59dots)	0mm	4.2mm 0.16" (50dots)

Confidential

Size	A	B	C	D	E	F	G
DL Long Edge	110mm 4.33" (1,299dots)	220mm 8.66" (2,598dots)	102mm 4.00" (1,199dots)	220mm 8.66" (2,598dots)	4.0mm 0.16" (50dots)	0mm	4.2mm 0.16" (50dots)
3X5	127mm 5.00" (1,500dots)	76.2mm 3.00" (900dots)	116.8mm 4.60" (1,380dots)	76.2mm 3.00" (900dots)	5.0mm 0.20" (60dots)	0mm	4.2mm 0.16" (50dots)

Note :

- The paper sizes indicated here should confirm to the nominal dimensions specified by JIS except B5 (ISO), B6 (ISO).
- The dot size is based on 300 dpi resolution.

Confidential

2.8 Print Speeds with Various Settings

Print speed is up to 30 ppm for A4 size and 32ppm for Letter size when loading A4 or Letter size paper from the paper tray in the plain paper mode.

Actual print speed varies depending on the media type or paper size as shown in the tables below;

<A4/Letter size>

Media type setting	Print speed (for all models)
Plain paper, Recycled paper	A4: 30 ppm / Letter: 32 ppm
Plain paper thin	A4: 30 ppm / Letter: 32 ppm
Thick paper, Envelope, Envelope thin, Label	A4: 15 ppm / Letter: 16 ppm
Thicker paper, Bond paper, Envelope thick	3 ppm

<Smaller size than A4 or Letter>

Media type setting	Print speed (for all models)
Plain paper, Recycled paper	0 to 90 second 32 ppm, 90 second or later 15 ppm
Plain paper thin	A4: 30 ppm / Letter: 32 ppm
Thick paper, Envelopes, Envelopes thin, Label, HAGAKI	0 to 9 second 16 ppm, 9 second or later 15 ppm
Thicker paper, Bond paper, Envelopes thick	3 ppm

Note :

- The print speed may vary according to conditions, such as paper size and paper tray.
- When a smaller size paper than A4 or Letter is printed, the temperature on both edges of the fuser unit is much higher than the temperature on the center of the unit where the paper is fed depending on the setting or model. Therefore, the print speed is slowed in order to decrease the temperature on the edges after the specified time, it is maximum print speed when you first start printing.
- The actual print speed varies depending on the paper size.

CHAPTER 2

THEORY OF OPERATION

CHAPTER 2 THEORY OF OPERATION

This chapter gives an overview of the printing mechanisms as well as the sensors, actuators, and control electronics. It aids in understanding the basic principles of operation as well as locating defects for troubleshooting

CONTENTS

1. OVERALL 2-1

1.1 General Block Diagram 2-1

2. ELECTRONICS 2-2

2.1 General Block Diagram 2-2

3. MECHANICS 2-3

3.1 Cross-section Drawing 2-3

3.2 Cross-section Drawing 2-4

3.2.1 Plate-up Function of the Paper Tray 2-5

3.2.2 Paper supply 2-6

3.2.3 Paper registration 2-7

3.2.4 Paper eject 2-8

3.2.5 Duplex printing 2-9

3.2.6 Paper feeding from the MP tray 2-10

3.2.7 Paper feeding from the LT tray (Tray 2 / Tray 3) 2-10

3.3 Toner Cartridge 2-11

3.3.1 Methods for Detecting and Counting Toner Life 2-11

3.3.2 Cartridge life 2-12

3.3.3 New toner detection 2-13

3.4 Print 2-16

3.4.1 Basic Principle 2-16

3.4.2 Print Process 2-17

3.5 Sensors position 2-22

1. OVERALL

1.1 General Block Diagram

Fig. 2-1 shows a general block diagram.

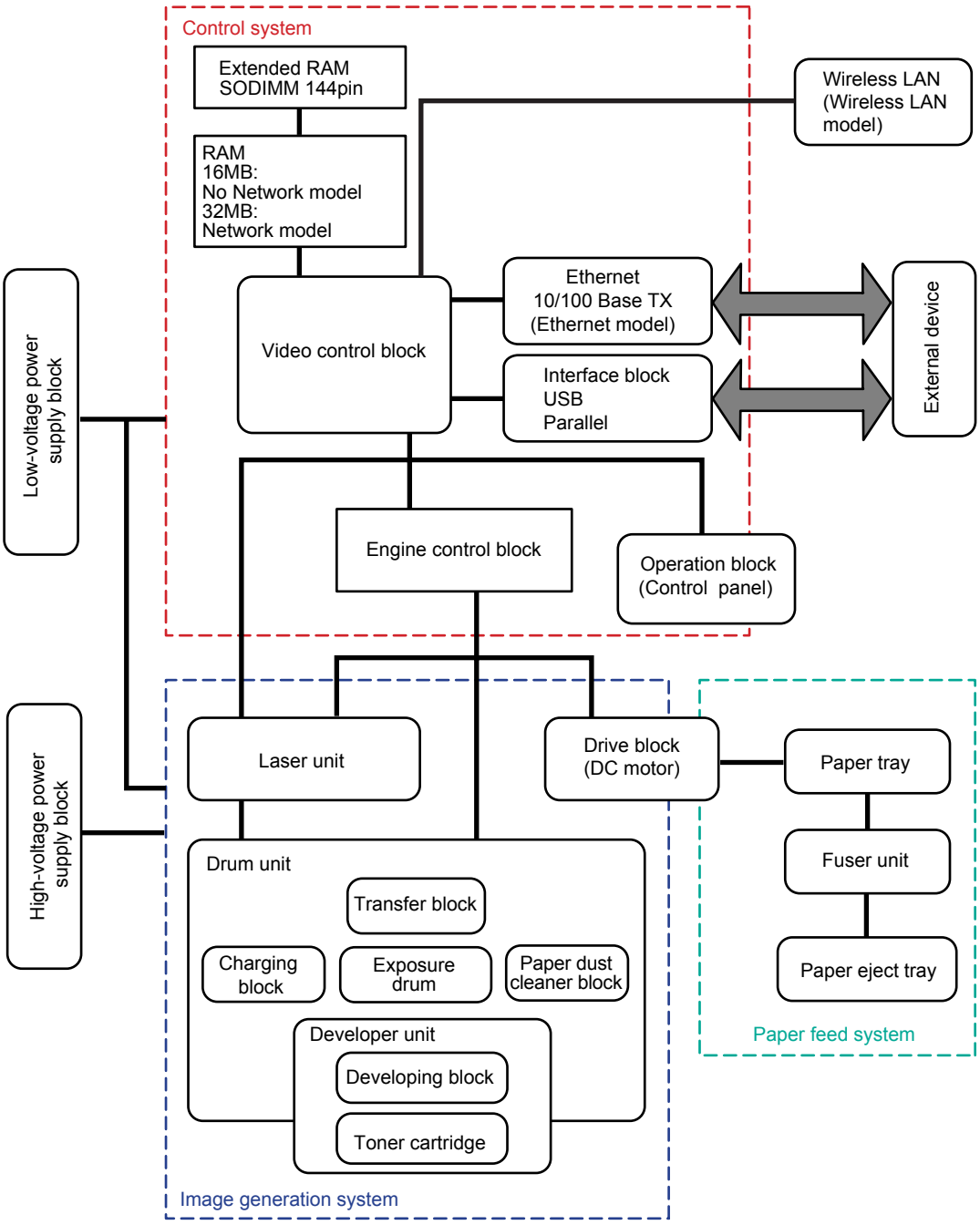

Fig. 2-1

Confidential

2. ELECTRONICS

2.1 General Block Diagram

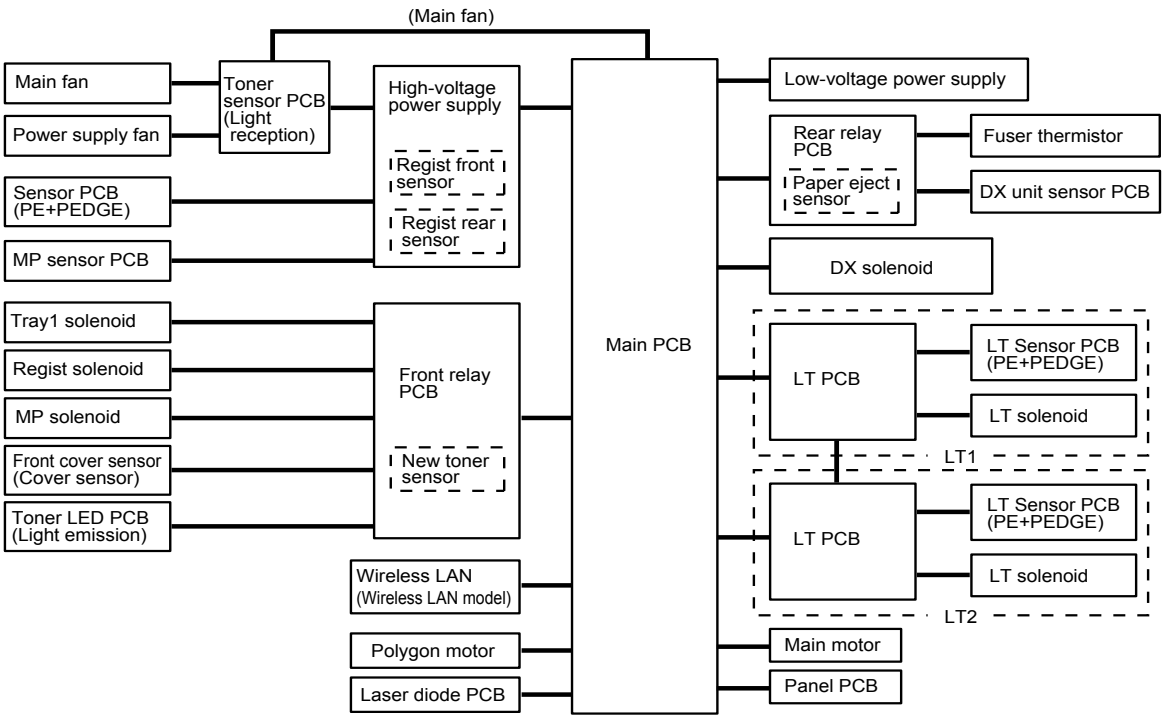

Fig. 2-2

Confidential

3. MECHANICS

3.1 Cross-section Drawing

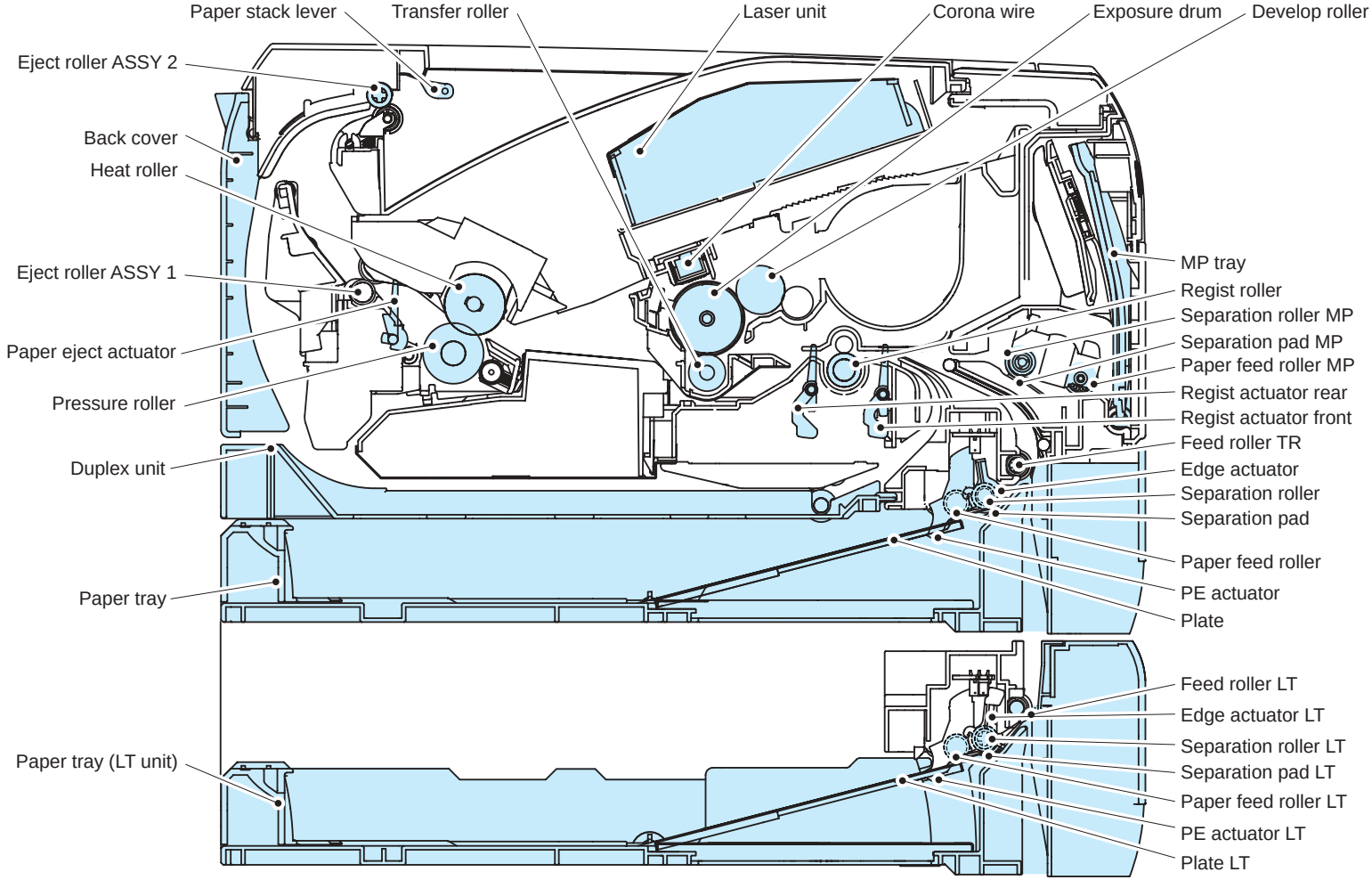

Fig. 2-3

Confidential

3.2 Cross-section Drawing

The following figure shows the paper feeding paths.

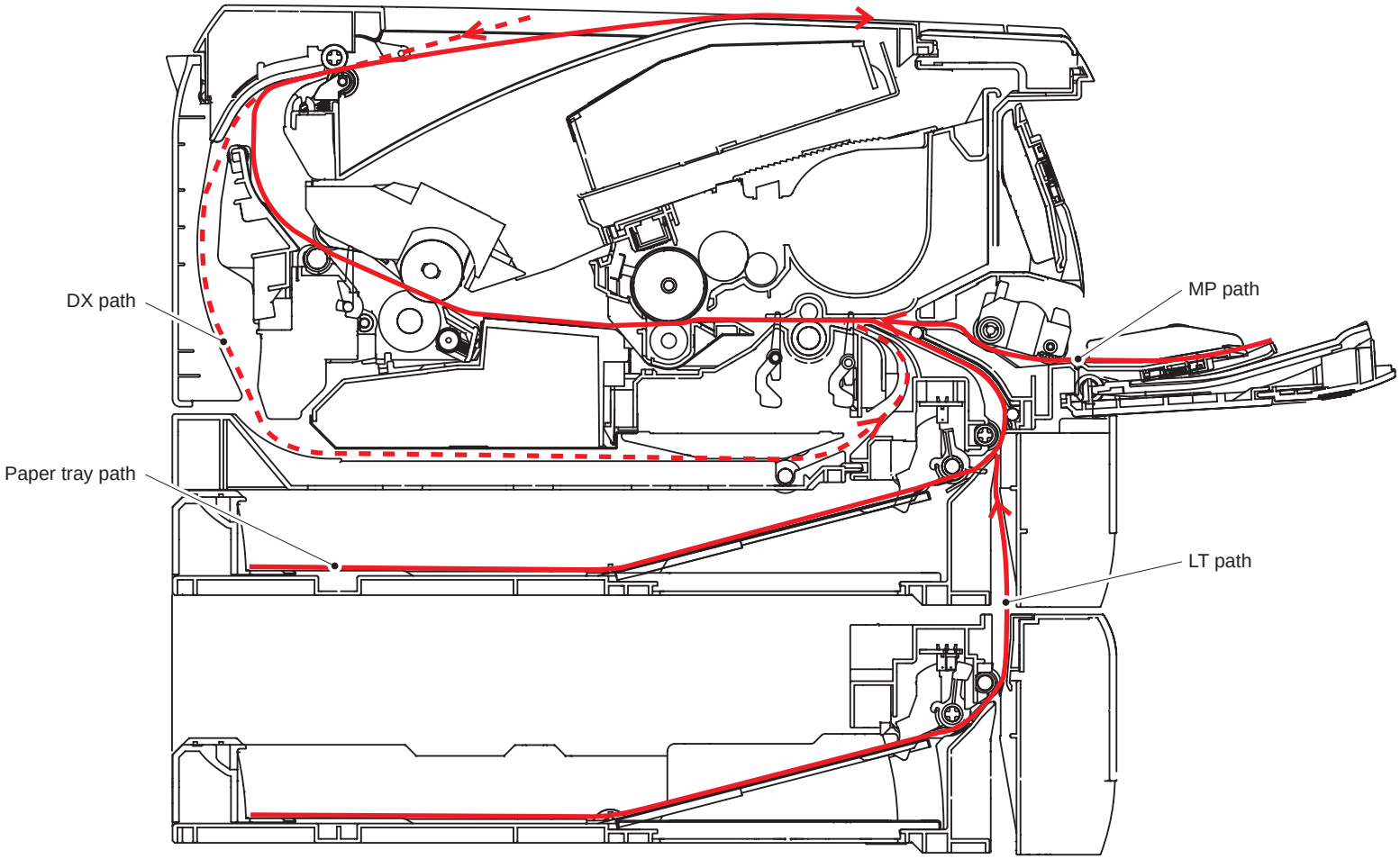

Fig. 2-4

Confidential

3.2.1 Plate-up Function of the Paper Tray

The plate ASSY in the paper tray is pushed up with the motor drive and not with the spring in order to maintain the constant pressure to the feed roller and to give the paper feeding performance.

When the paper tray (Tray1 cassette) is installed to the machine, the plate is lowered.
If the main motor drives in this situation, the driving reaches the lift gear 46 through some gears. This driving also reaches the plate up plate and it pushes up on the plate ASSY.

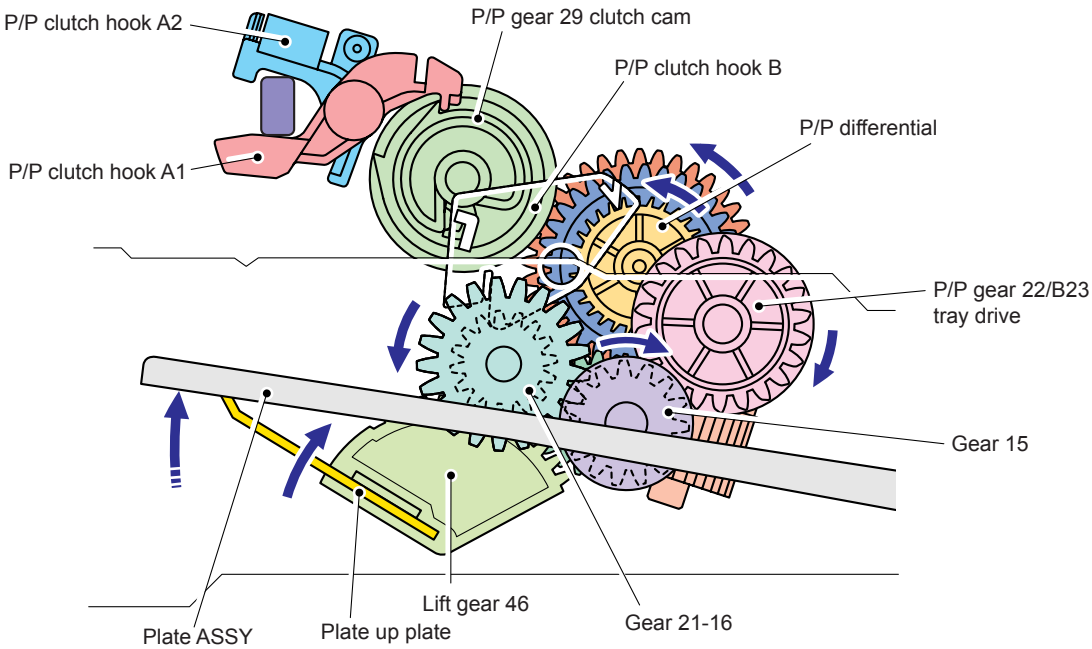

Fig. 2-5

When the feed roller is pushed up, the hook is released by the lift arm, and the rotation of the clutch gear is stopped. Then, the pressure plate is stopped to push up.

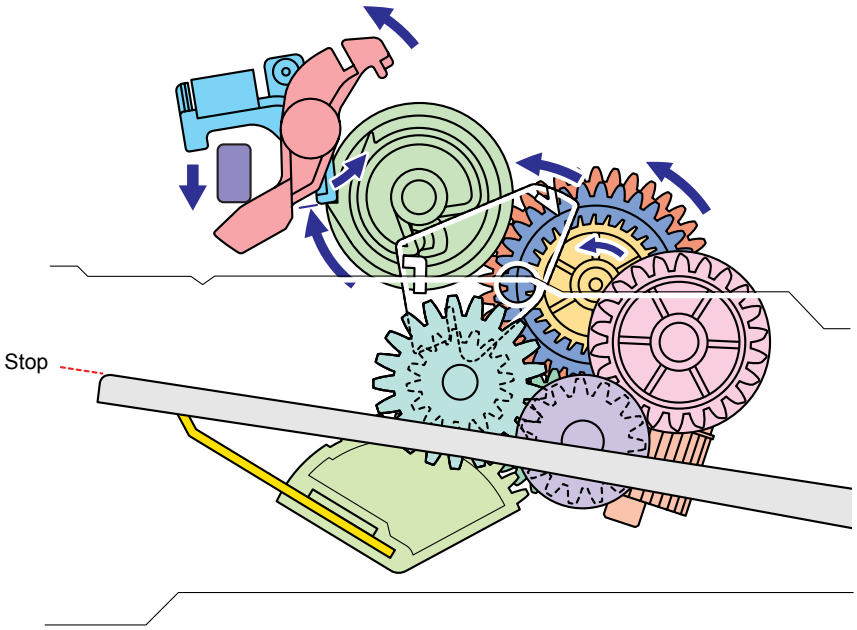

Fig. 2-6

When the tray is pulled out from the printer, the pressure plate is returned to the original position. When the tray is put into the printer, the above operation is performed from the start again.

Confidential

3.2.2 Paper supply

The feed roller picks up a few sheets or one sheet of paper from the paper tray every time it is rotated and feeds it to the separation roller.

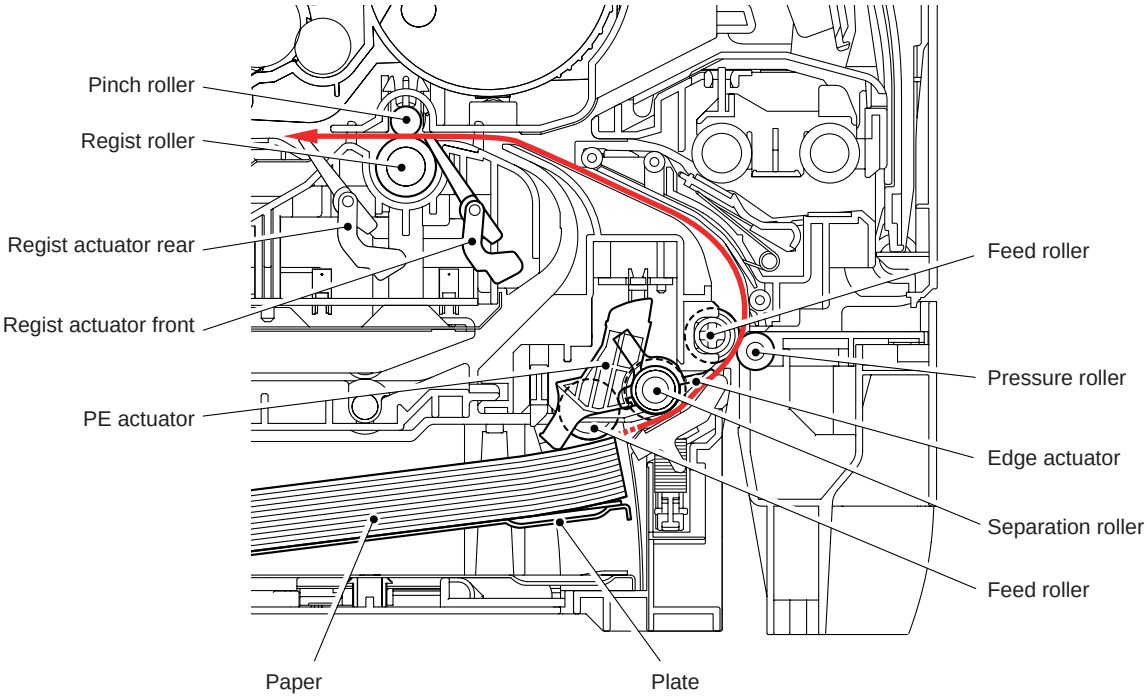

Fig. 2-7

The main motor drive power is transmitted to the gears, and the feed roller and separation roller are rotated. Then, the paper is gripped between the separation roller and separation pad and separated into individual sheets.

The paper drawn out of the paper tray pushes against the regist front actuator, and the absence of paper is detected by the actuator movement. The tail edge actuator detects the end of the paper fed.

3.2.3 Paper registration

After the paper top position is detected by the regist actuator front, the paper, separated into individual sheets by the separation roller, is fed further for a specified time, and the paper top position reaches the regist roller so that the paper skew is adjusted. Then, the regist solenoid is turned on, the regist roller starts turning, and the paper is fed to the transfer roller in the drum/toner ASSY.

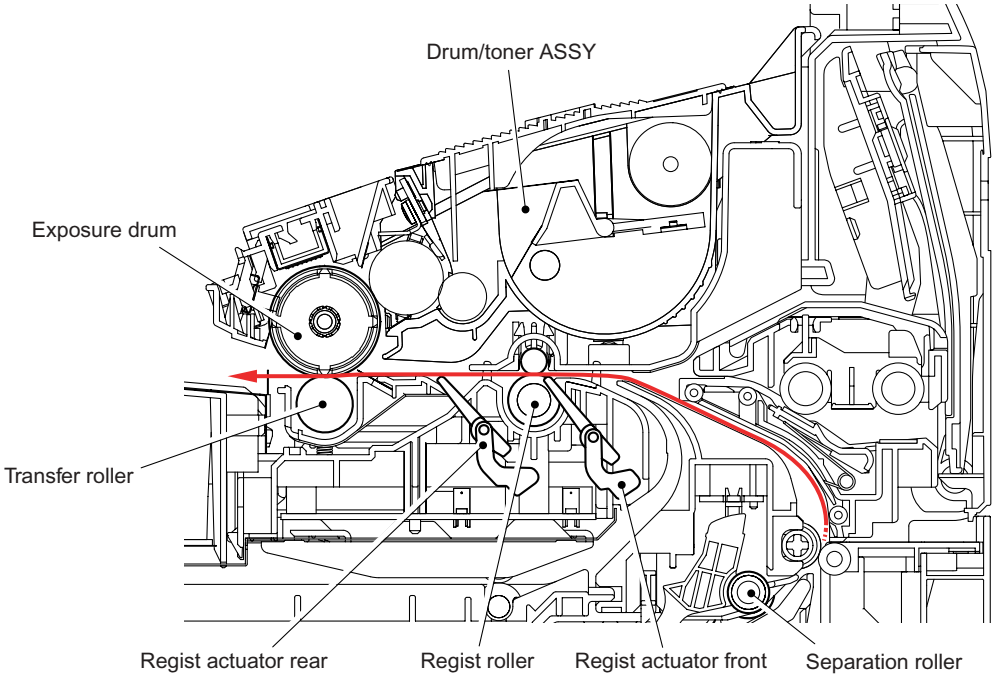

Fig. 2-8

The regist actuator rear in the path from the regist roller to the transfer roller controls the first print position on the paper. The printer starts transferring an image when a definite time passes after the paper is passed through the regist actuator rear.

Confidential

3.2.4 Paper eject

After the printing image on the exposure drum is transferred onto the paper, the paper is fed to the fuser unit to fix unfixed toner onto the paper by the heat roller and the pressure roller in the fuser unit.

Afterwards, the paper is ejected from the fuser unit. The paper eject actuator detects whether the paper is ejected correctly or not.

After the paper exits from the heat roller, the paper is turned by the outer chute and ejected face down into the top output tray through the eject roller ASSY 2.

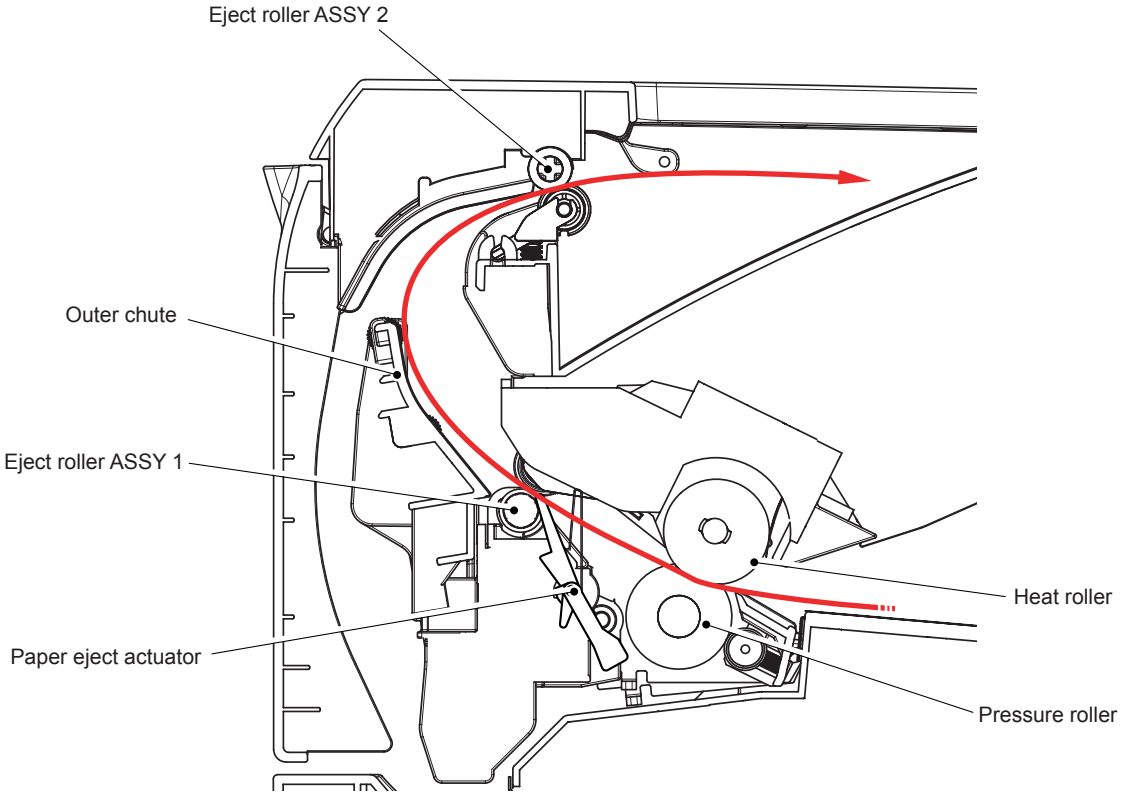

Fig. 2-9

When a paper jam occurs, the main motor rotates conversely to throw out the engagement of the gear. Consequently, the eject roller ASSY 2 is released so that the jammed recording paper is removed easily.

3.2.5 Duplex printing

After the paper exits from the eject roller ASSY 2 with the front of sheet printed, the eject roller ASSY 2 rotates conversely and feeds the paper to the DX unit, where the paper skew is adjusted.

Afterwards, the paper is ejected from the DX unit to the path through the regist roller and the transfer roller to the transfer block in the drum unit again for process of printing on the back of sheet.

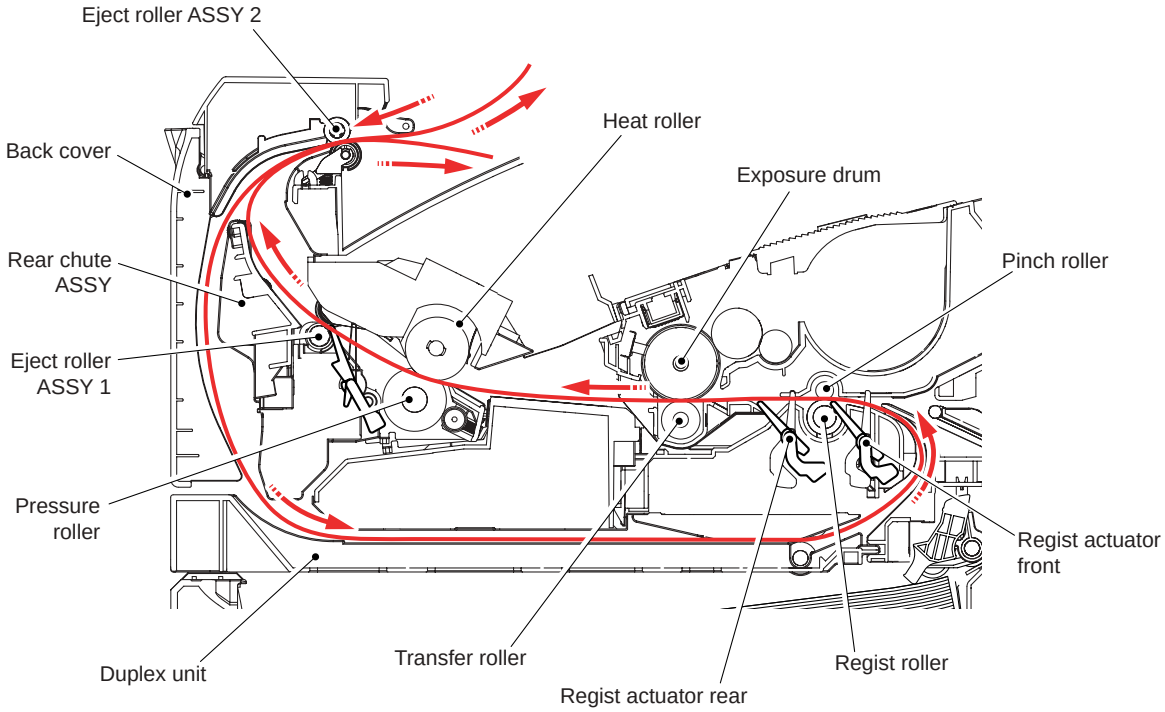

Fig. 2-10

Note :

- The duplex printing prints the 1st page after printing the 2nd page first.
  For example, when prints the four pages, prints in order to 2nd page to 1st page to 4th page to 3rd page.

3.2.6 Paper feeding from the MP tray

The separation roller MP is connected with the feed roller through the gear in the MP roller holder ASSY. When the separation roller is driven, therefore, the feed roller is also driven. At this time, the recording paper is drawn out of the MP tray by rotation of the paper feed roller MP contacted with the recording paper. The drawn recording paper is separated into individual sheets by the separation roller MP.

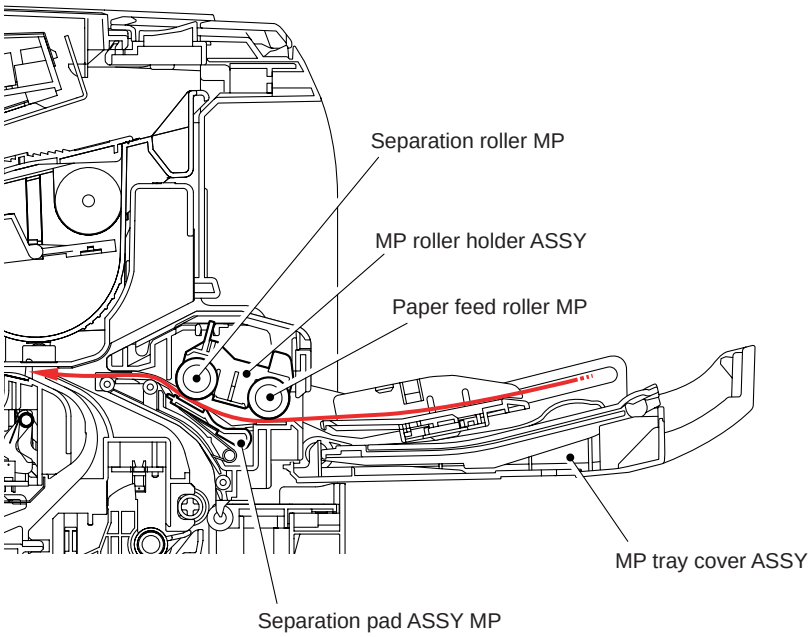

Fig. 2-11

3.2.7 Paper feeding from the LT tray (Tray 2 / Tray 3)

The motor drive is transmitted to the some gears to rotate the feed roller, then the recording paper is drawn out of the LT tray. The drawn recording paper is separated into individual sheet by the separation roller and the separation pad, and fed to the printer by the feed roller TR.

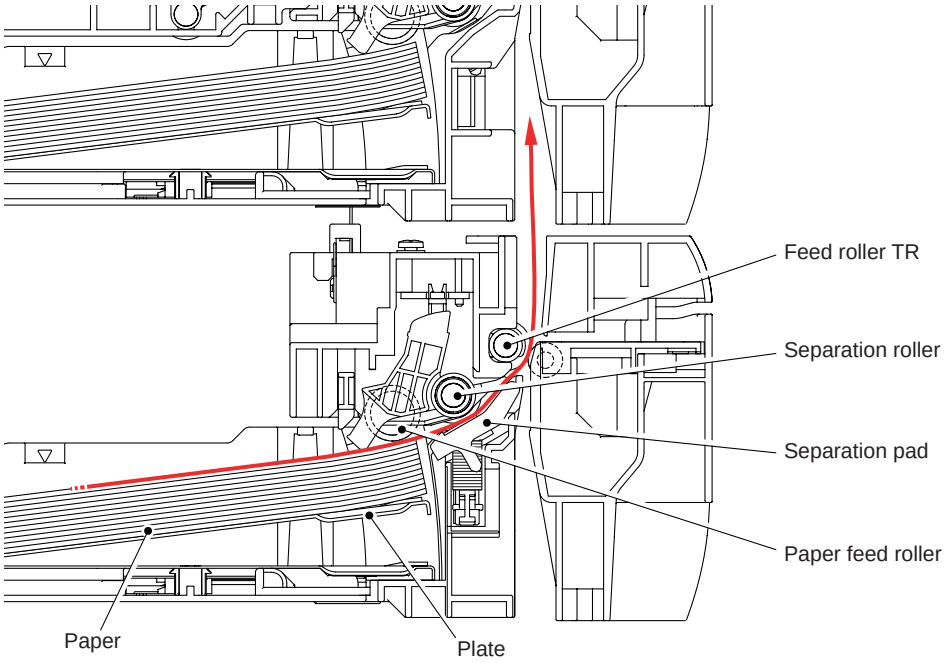

Fig. 2-12

Confidential

3.3 Toner Cartridge

3.3.1 Methods for Detecting and Counting Toner Life

When the machine detects the toner life end, "**Replace Toner**" is displayed in the state of LCD model and the red **Status** LED lights on, and the **Toner** LED lights on at the same time. in the state of LED model. The toner life is displayed through the following two ways. First, such indication is displayed when detection is performed by the toner sensor; second, it is displayed at the time when a rotation rate of the develop roller reaches its upper limit.

(1) Detection by the toner sensor

The low amount of toner remaining can be detected by checking the imperviousness to light of the toner in the cartridge by means of the transmissive photosensor.

(2) Detection by means of rotation rates of the develop roller reached its upper limit

The machine counts the accumulated number of the rotations for the develop roller.

3.3.2 Cartridge life

A new toner cartridge can print approximately 3,000 (standard toner) or approximately 8,000 (high yield toner) A4 or Letter size single-sided pages at normal duty (ISO/IEC19752). In the case of low-duty printing, if the number of printed pages are reached the cartridge life, "**Replace Toner**" is indicated by lighting **Toner** LED (HL-5340D/5340DL/5350DN/5350DNLT/5370DW/5370DWT) or "**Replace Toner**" message appears on the LCD panel (HL-5380DN) before the toner runs out because the developer roller surface or other toner sealing is worn out due to a rotation of the rollers.

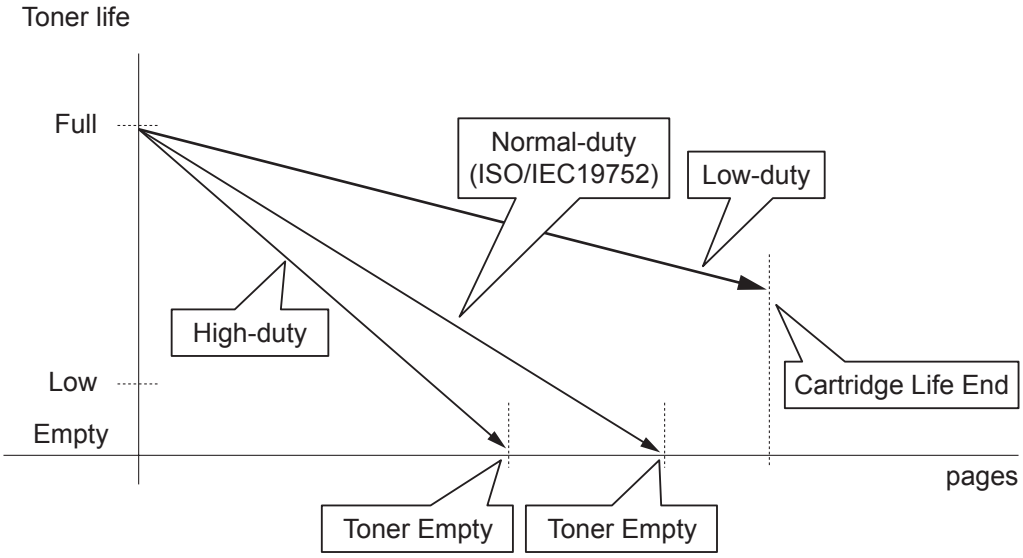

Memo :

- If reached the cartridge life end, "**Replace Toner**" message appears even if the toner is contained.

<Cartridge Life>

The toner cartridge life varies according to the average number of printing per job.
As the deterioration of toner will be less in case of printing more pages continually once time than usual, the more printing pages per job, the more printable pages of toner cartridge.

Table: The relationship between the average printing pages per job and the toner cartridge life

Average printed pages (page/job)	1	2	3	4	5	6	7	8
Cartridge Life (Standard)	3,500	5,274	6,346	7,064	7,579	7,966	8,267	8,508
Cartridge Life (High Yield)	9,500	14,315	17,225	19,174	20,571	21,621	22,439	23,094

Increasing the number of times of power switch ON and warming operation in company with opening or closing cover will also cause the deterioration of toner, so the more frequency those operations be taken, the less pages the toner cartridge can print.

Table: The toner cartridge lives in case of pressing power switch Off/ON before printing.

Average printed pages (page/job)	1	2	3	4	5	6	7	8
Cartridge Life (Standard)	1,925	3,263	4,246	5,000	5,596	6,079	6,478	6,814
Cartridge Life (High Yield)	5,225	8,856	11,526	13,571	15,189	16,500	17,584	18,496

3.3.3 New toner detection

This product has a function to detect the remaining toner by checking the level at which toner in a cartridge interrupts light using transmissive light sensor. This function informs the users that the toner cartridge has reached the end of its life and it must be replaced with a new one. However, as described in the previous page, when the toner cartridge reaches its life because of the develop roller's abrasion, this product stops the operation and indicates toner reaches its life and lets the users to replace the toner cartridge with a new one even if the remaining amount of the toner is enough. At this time, the toner LED sensor cannot detect that a new toner cartridge is mounted. There is a possibility that the image quality decreases and the toner leakage occurs if the cartridge that reaches its life is continuously used. Therefore, there is a need to reset prohibition of the print operation when a new toner cartridge is mounted. It is new toner detection mechanism to explain here to enable this distinction.

The new toner detection can distinguish the standard toner and high yield toner cartridge.

The new toner detection is performed by the following procedure.

(1) The main motor will drive gear (4) through the interconnection of other gears.

(2) When gear (4) is rotated, rib A on that gear will push against the new toner actuator; the new toner sensor will detect the actuator motion, and the machine detects that a new toner cartridge has been installed.

(3) The standard toner cartridge has Rib A and Rib B on gear (4).
When the toner actuator is pushed twice, the two signals that are generated by the new toner sensor, tell the machine that a standard toner cartridge has been installed.

(4) The high yield toner cartridge only has Rib A on gear (4).
When the toner actuator is pushed once, the signal that is generated by the new toner sensor, tell the machine that a high yield toner cartridge has been installed.

<Printer side view when a new toner cartridge is installed>

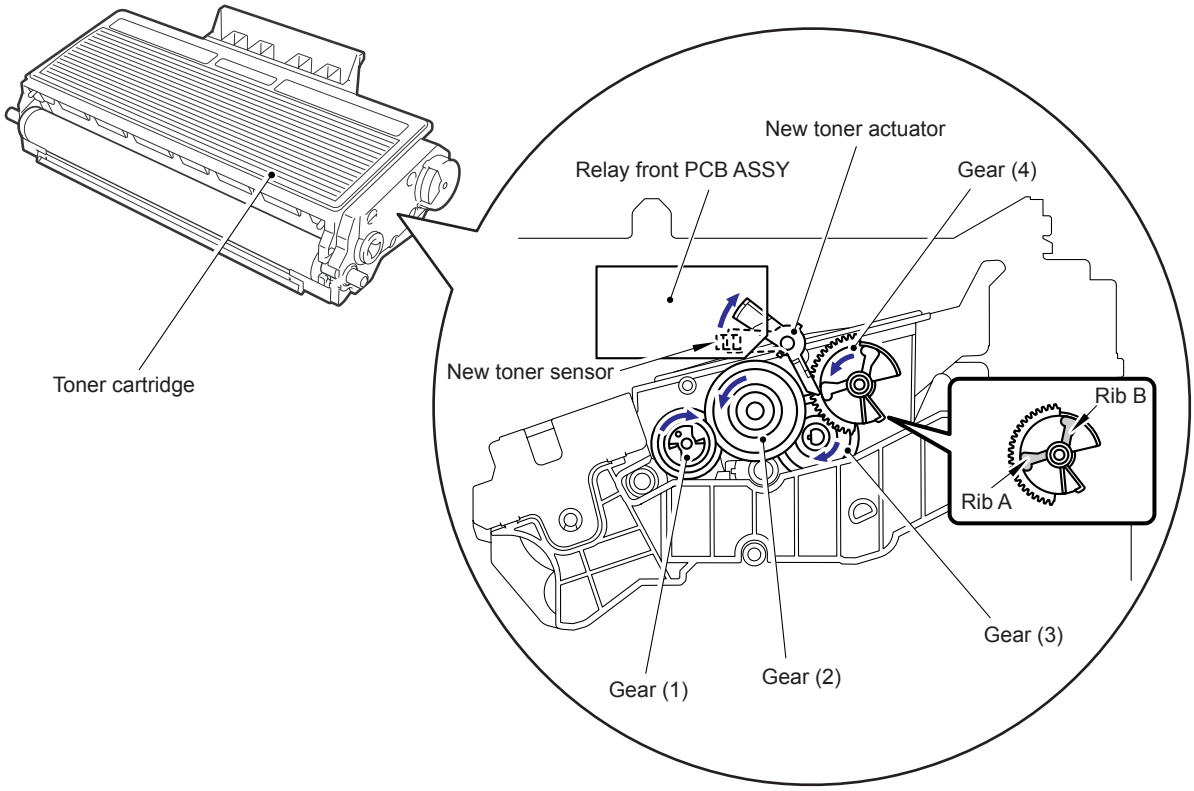

Fig. 2-13

When the new toner detection mechanism detects that the toner cartridge is replaced with a new one, the developing bias voltage is initialized at the same time.

The toner used for the printer has a property that print density is light first and gradually darker in the course of usage. The developing bias controls the toner property so that the print density is constant from first to last.

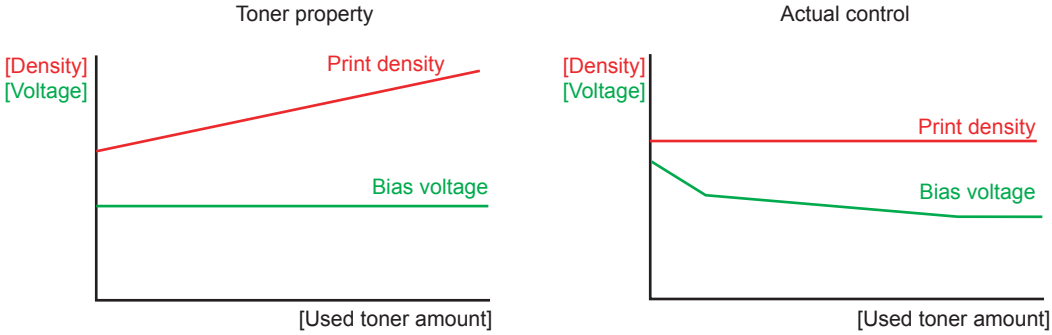

To obtain a print result of a constant density all the time, the printer counts the number of print pages immediately after the toner cartridge is replaced and changes the bias voltage according to the accumulated number of prints with the toner cartridge.

The bias voltage is changed with the steps described below:

(1) When the new toner sensor detects that the toner cartridge is replaced with a new (full) one, the developing bias is set to 400V (initialized).

(2) After that, the bias voltage is stepped down according to the number of prints. Ultimately, the bias voltage is 315V.

<When a new toner cartridge is inserted after "Replace Toner" is displayed>

Corresponding counter, Setting value	Operation
Counter of toner cartridge changes	+1
Page counter for each toner cartridge	Reset (0)
Coverage for each toner cartridge	Reset (0)
Developing bias voltage	Reset (Initial setting)

Confidential

<When a toner cartridge in use is inserted after "Replace Toner" is displayed by toner sensor detection [*1]>

A count value before changed is continuously indicated as a number of the rotation for the develop roller. Irrespective of the amount of toner, printing becomes disabled when the number of the rotation for the develop roller reaches the upper limit.

Corresponding counter, Setting value	Operation
Counter of toner cartridge changes	No count up
Page counter for each toner cartridge	Continued
Coverage for each toner cartridge	Continued
Developing bias voltage	Reset (Initial setting)[*2]

[*1] Excluding a toner cartridge in use in which there is a little toner remained.

[*2] The developing bias voltage is reset to the initial setting once when a toner cartridge in use is inserted.

Note :

- The discrimination between new and secondhand toner cartridges refers to the new toner detection to be heretofore described.

3.4 Print

3.4.1 Basic Principle

The printing process consists broadly of 5 processes: electrification, exposure, development, transfer and fusing.

1. Charging: The surface of an exposure drum is electrically charged.
2. Exposure: A printed image is formed on the surface of the drum by applying laser beam.
3. Development: Toner is adhered to the surface of the drum.
4. Transfer: The toner on the surface of the exposure drum is transferred to paper.
5. Fusing: The transferred toner is fused into place on the paper.

After these processes, the image is printed on the paper.

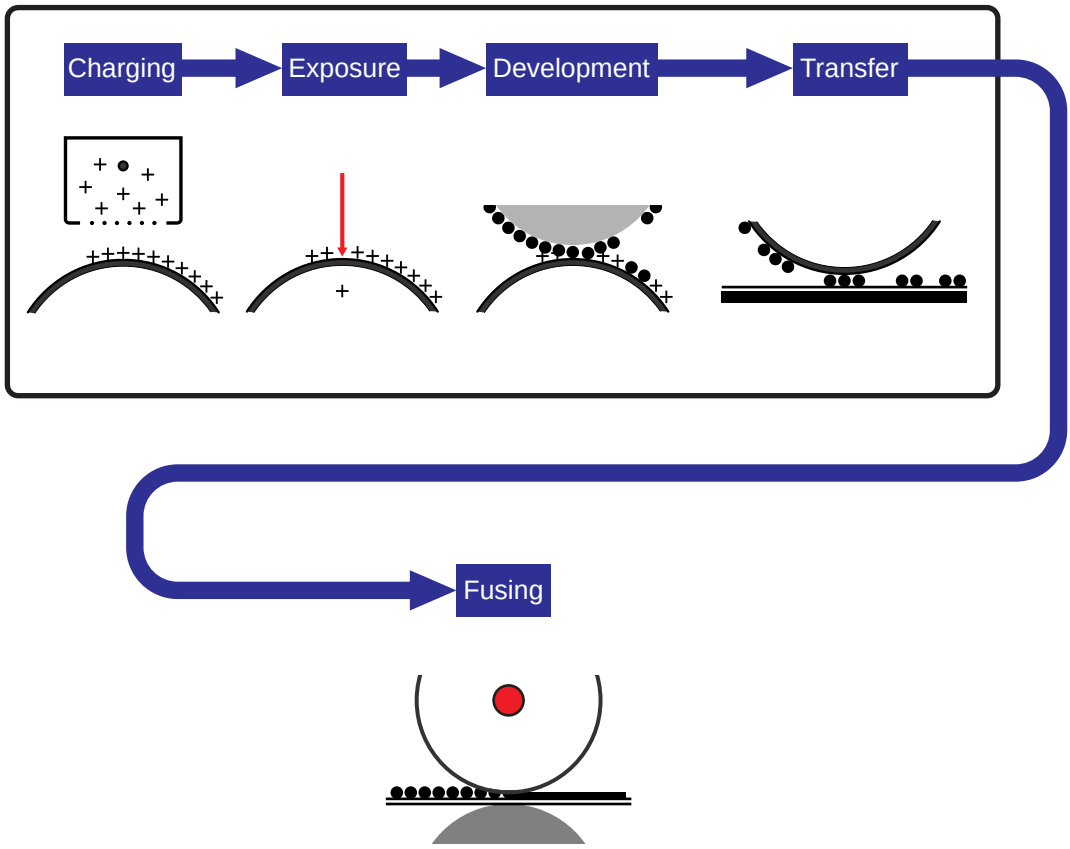

Fig. 2-14

Confidential

3.4.2 Print Process

(1) Charging

The flow of the ion charge is controlled by constant voltage of the grid 850 V to ensure it is distributed evenly on the drum surface. In order to coat toner on the exposure drum, the drum needs to be evenly electrified. Ions are produced by supplying high-voltage power to the corona wire.

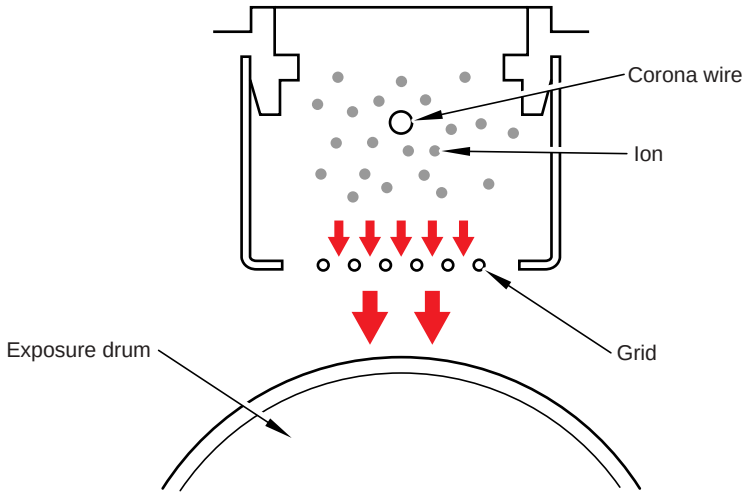

Fig. 2-15

Memo :

- The level of ozone expelled from the machine is less than 3.0 mg/h therefore not harmful to the human body. Applicable safety standards have been complied.

Confidential

(2) Exposure

The laser beam radiated from a laser diode inside the laser unit is concentrated into a constant width by a slit in the CO lens cell and then reflected by a polygon mirror rotating at high speed. The evenly charged exposure drum is irradiated with reflected light and exposed. Surface potential is lowered by such exposure and a printed image is formed.

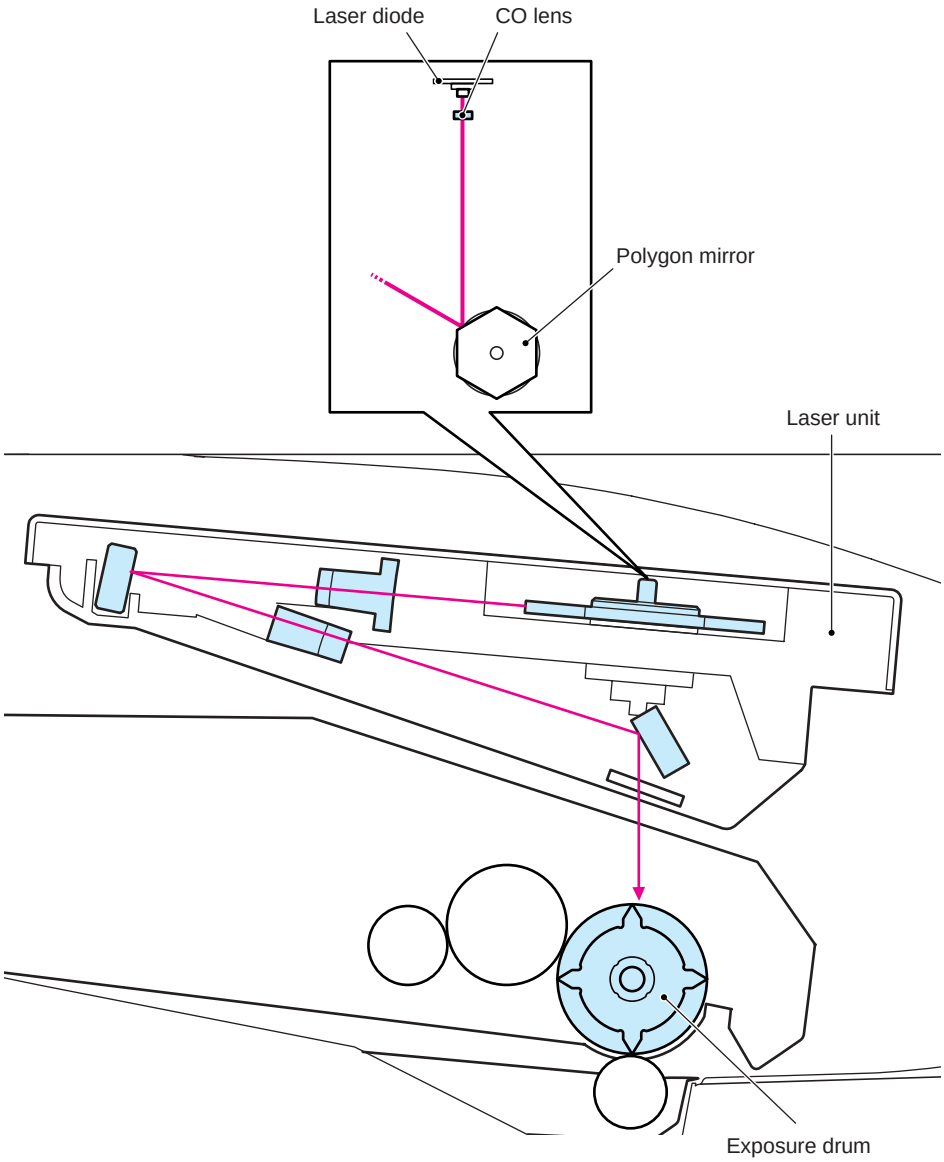

Fig. 2-16

Confidential

(3) Development

Toner is attracted to a printed-image area on the exposure drum where surface potential is lowered due to exposure.

By controlling developing bias voltage supplied to the develop roller, the amount of toner taken to the drum is adjusted to keep printing density constant.

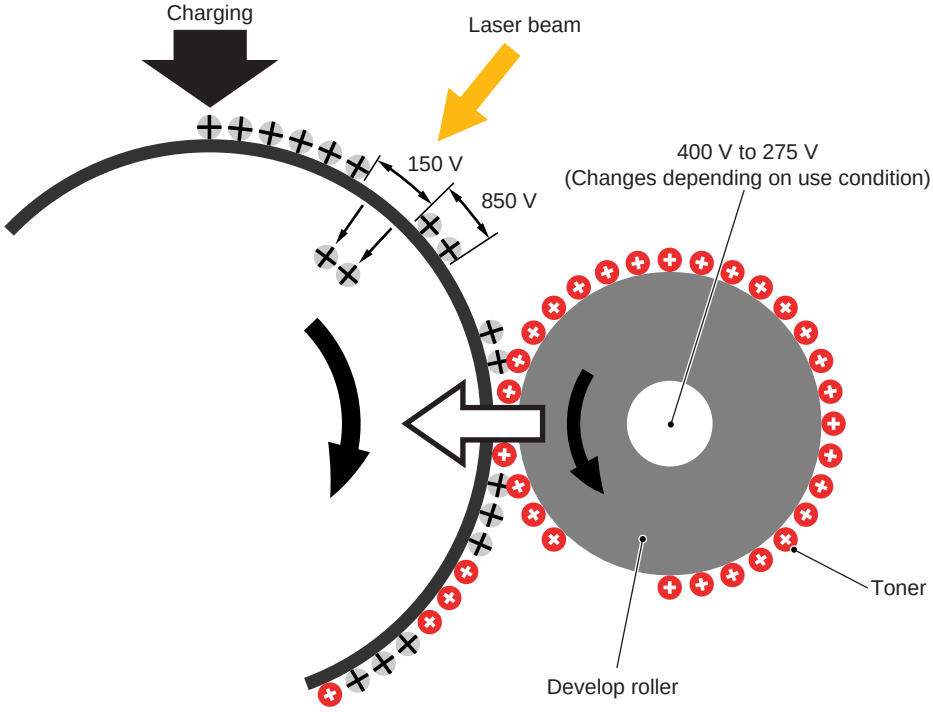

Fig. Ref. 2-17

<Flow up of toner to the development process>

Toner adheres to the charged develop roller. Such adhered toner is adjusted to an even thickness, and is attracted to an exposed area on the exposure drum.

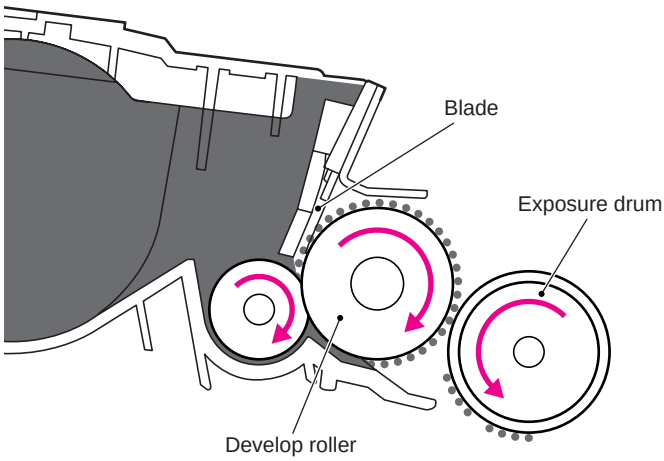

Fig. 2-18

Confidential

(4) Transfer

By applying a minus charge to the transfer roller, the toner adhered to the exposure drum is transferred to paper.

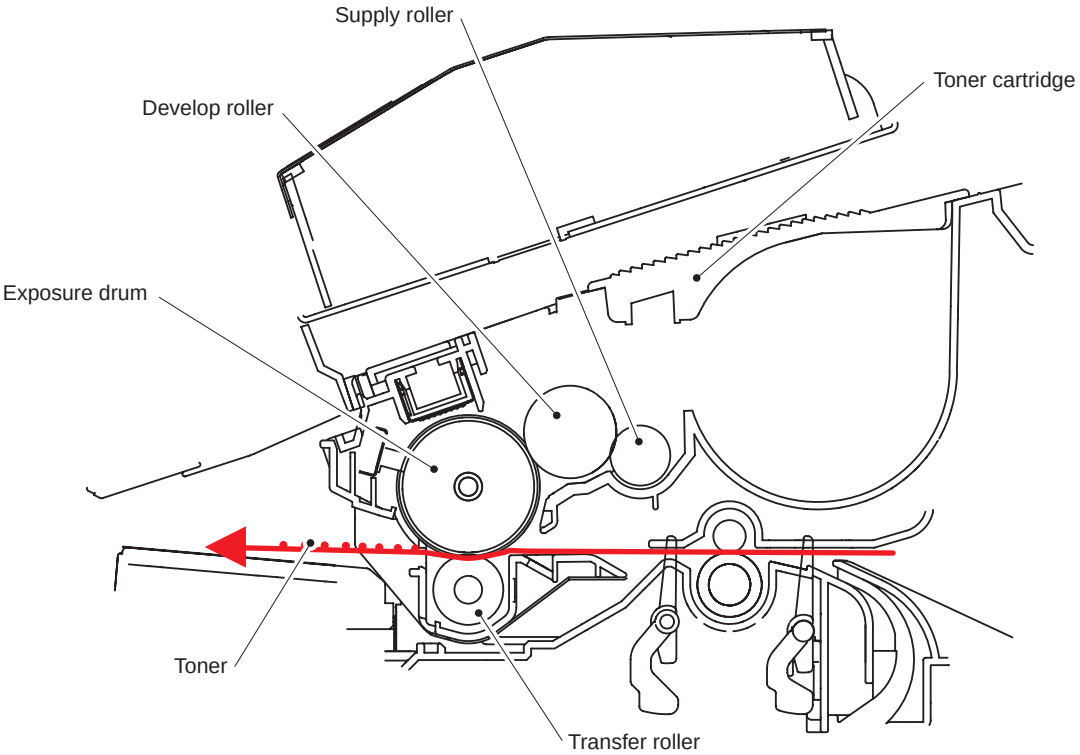

Fig. 2-19

Memo :

- Control of transfer bias
  The transfer bias applied in the transfer roller is adjusted according to types and sizes of paper so as to keep excellent image quality.

Confidential

(5) Fusing

The toner transferred on paper passes between the heat roller and the pressure roller in the fuser unit, being fused by heat and pressure. The thermistor detects surface temperature of the heat roller and turns ON/OFF the halogen heater lamp. The temperature is kept constant.

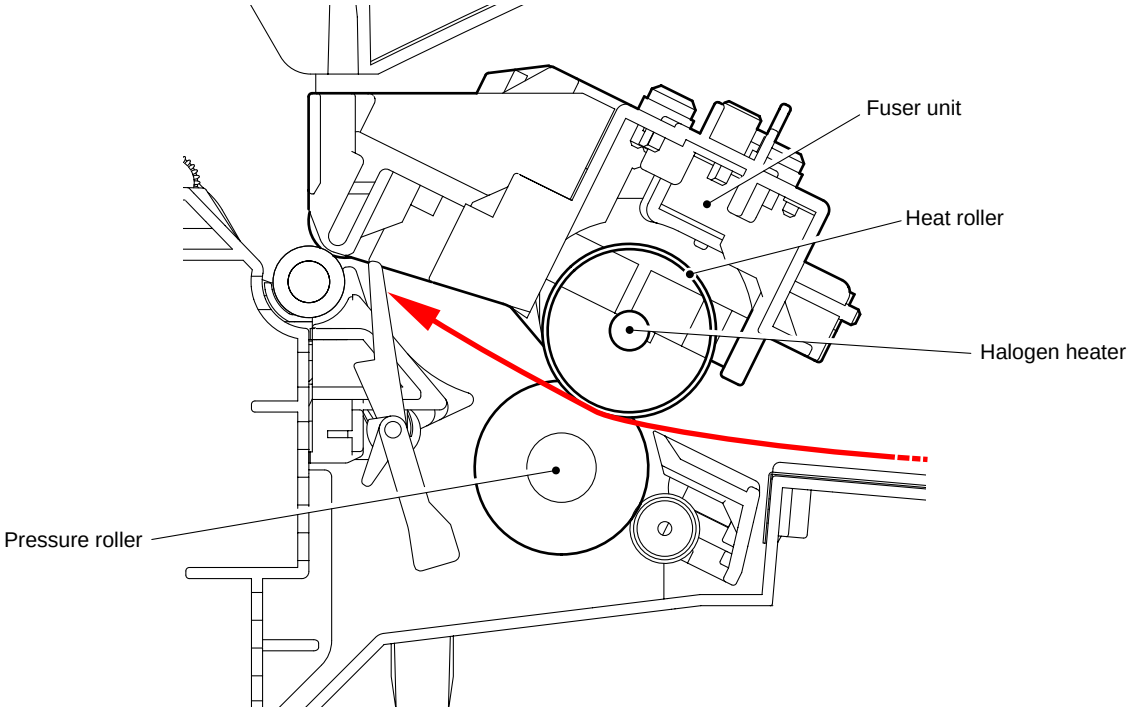

Fig. 2-20

Memo :

- Control of fusing temperature
  The fuser unit adjusts such temperature according to types and sizes of paper so as to keep excellent image quality.

Confidential

3.5 Sensors position

Sensor name	Type	Located on	Function
Regist front sensor	Photo sensor	High-voltage PS PCB	Detect the paper top position or absence of paper.
Regist rear sensor	Photo sensor	High-voltage PS PCB	Control the first print position on the paper.
Paper eject sensor	Photo sensor	Relay rear PCB	Detect whether the paper is ejected.
New toner sensor	Photo sensor	Relay front PCB	Detect whether a new toner cartridge is installed. Detect a new toner cartridge type.
Toner LED PCB (Light emission)	Photo sensor	Frame R	Detect whether the toner cartridge which contains enough toner.
Toner sensor PCB (Light reception)	Photo sensor	Frame L	
Front cover sensor	Mechanical switch	Frame L	Detect the opening and closing of the front cover.
PE sensor	Photo sensor	PE EG sensor ASSY	Detect the absence of the paper in the paper tray.
Edge sensor	Photo sensor	PE EG sensor ASSY	Detect the end of the paper. Detect the absence of the paper tray.
MP PE sensor	Photo sensor	MP PE sensor ASSY	Detect the absence of the paper in the MP tray.
DX tray sensor	Mechanical switch	Relay rear PCB	Detect the opening and closing of the back cover. Detect the absence of the DX unit.

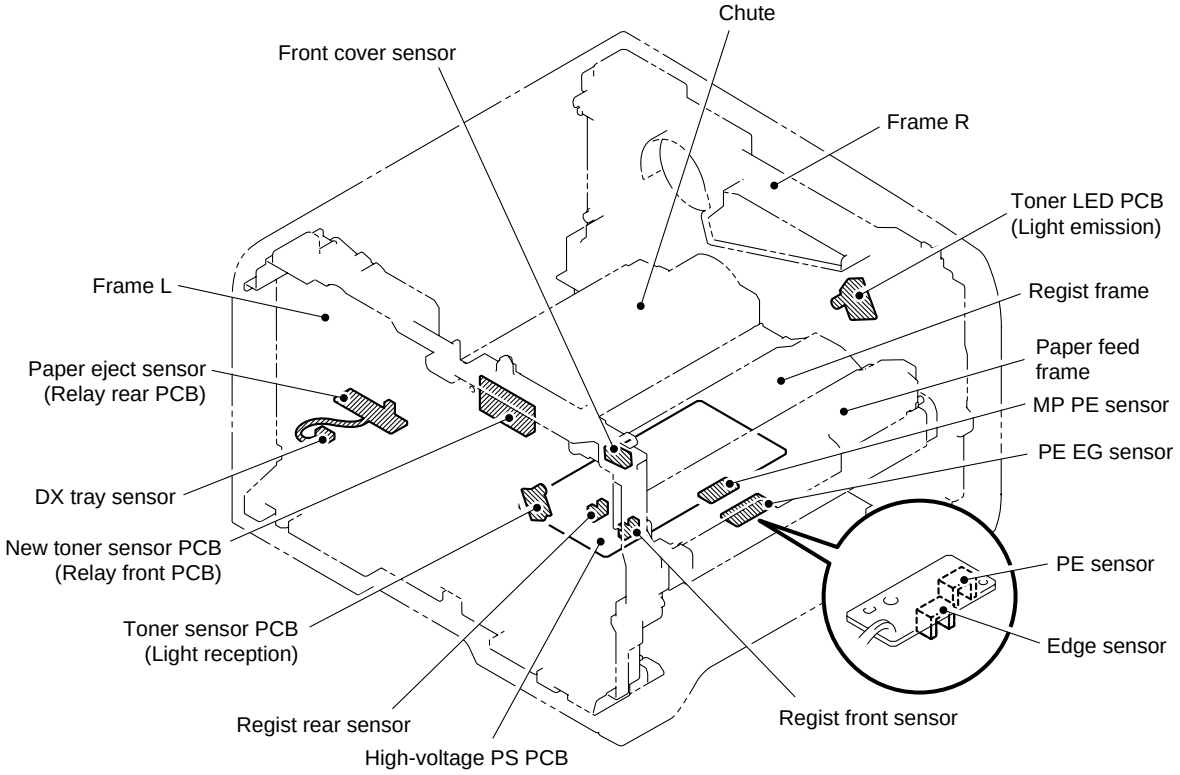
Chute
Front cover sensor
Frame R
Toner LED PCB
(Light emission)
Frame L
Regist frame
Paper eject sensor
(Relay rear PCB)
Paper feed
frame
MP PE sensor
PE EG sensor
DX tray sensor
New toner sensor PCB
(Relay front PCB)
PE sensor
Toner sensor PCB
(Light reception)
Edge sensor
Regist rear sensor
Regist front sensor
High-voltage PS PCB

Fig. 2-21

CHAPTER 3

ERROR INDICATION AND TROUBLESHOOTING

CHAPTER 3 ERROR INDICATION AND TROUBLESHOOTING

This chapter details error messages and codes that the incorporated self-diagnostic functions display if any error or malfunction occurs. If any error message appears, refer to this chapter to find which components should be checked or replaced.

The latter half of this chapter provides sample problems that could occur in the main sections of the machine and related troubleshooting procedures. This will help service personnel pinpoint and repair defective components.

CONTENTS

1. INTRODUCTION 3-1

1.1 Precautions 3-1

1.2 Part names 3-2

1.3 Initial Check 3-3

2. DISTINGUISH ERROR CAUSE 3-5

2.1 LED indication (LED model) 3-5

2.1.1 LED indication at Operator Calls 3-5

2.1.2 LED indication at Service Calls 3-9

2.2 Error Message (LCD model) 3-14

2.2.1 Operator calls 3-14

2.2.2 Error indication at Service Calls 3-15

2.3 Error Cause and Remedy 3-16

3. PAPER FEEDING PROBLEMS 3-29

3.1 No Feeding 3-29

3.2 Double Feeding 3-29

3.3 Paper Jam 3-30

3.4 Dirt on Paper 3-32

3.5 Wrinkles or creases 3-32

3.6 Waves in the paper / folds in the paper at the eject roller 2 3-32

3.7 Curl in the paper 3-33

3.8 Prints only single side of the paper when duplex-printing 3-33

4. TROUBLESHOOTING FOR PRINT IMAGE DEFECT 3-34

4.1 Image Defect Examples 3-34

4.2 Diameter of Rollers 3-34

4.3 Troubleshooting for Image Defect 3-35

5. SOFTWARE SETTING PROBLEMS 3-49

6. NETWORK PROBLEMS 3-50

1. INTRODUCTION

Troubleshooting is the countermeasure procedures that the service personnel should follow if an error or malfunction occurs with the machine. It is impossible to anticipate all of the possible troubles which may occur in future and determine the troubleshooting procedures, so this chapter covers some sample troubles. However, those samples will help the service personnel pinpoint and repair other defective elements.

1.1 Precautions

Be sure to observe and follow all the precautions to prevent any secondary problems from happening during troubleshooting.

(1) Always turn off the power and unplug the power cable before removing any covers or PCBs, adjusting the machine and so on. If you need to take voltage measurements with the power switched on, take the greatest of care not to receive an electric shock.

(2) When connecting or disconnecting cable connectors, make sure that you hold the connector body and not the cables.

(3) Electronic devices are sensitive to static build up; make sure that you touch a metal portion of the machine to discharge yourself before accessing the PCBs.
Handle PCBs with care when repairing them.

(4) Follow the warning by all means.

warning

The fuser unit becomes extremely hot during operation. Wait until it has cooled down sufficiently before replacing consumable items. DO NOT remove or damage the caution label located on or around the fuser.

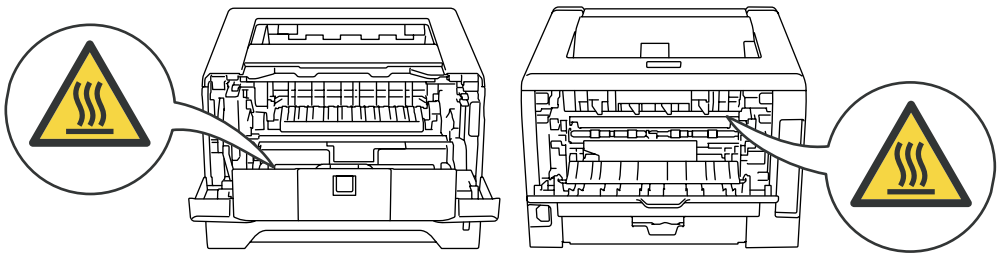

(5) Verify again that the repaired portion works properly.

1.2 Part names

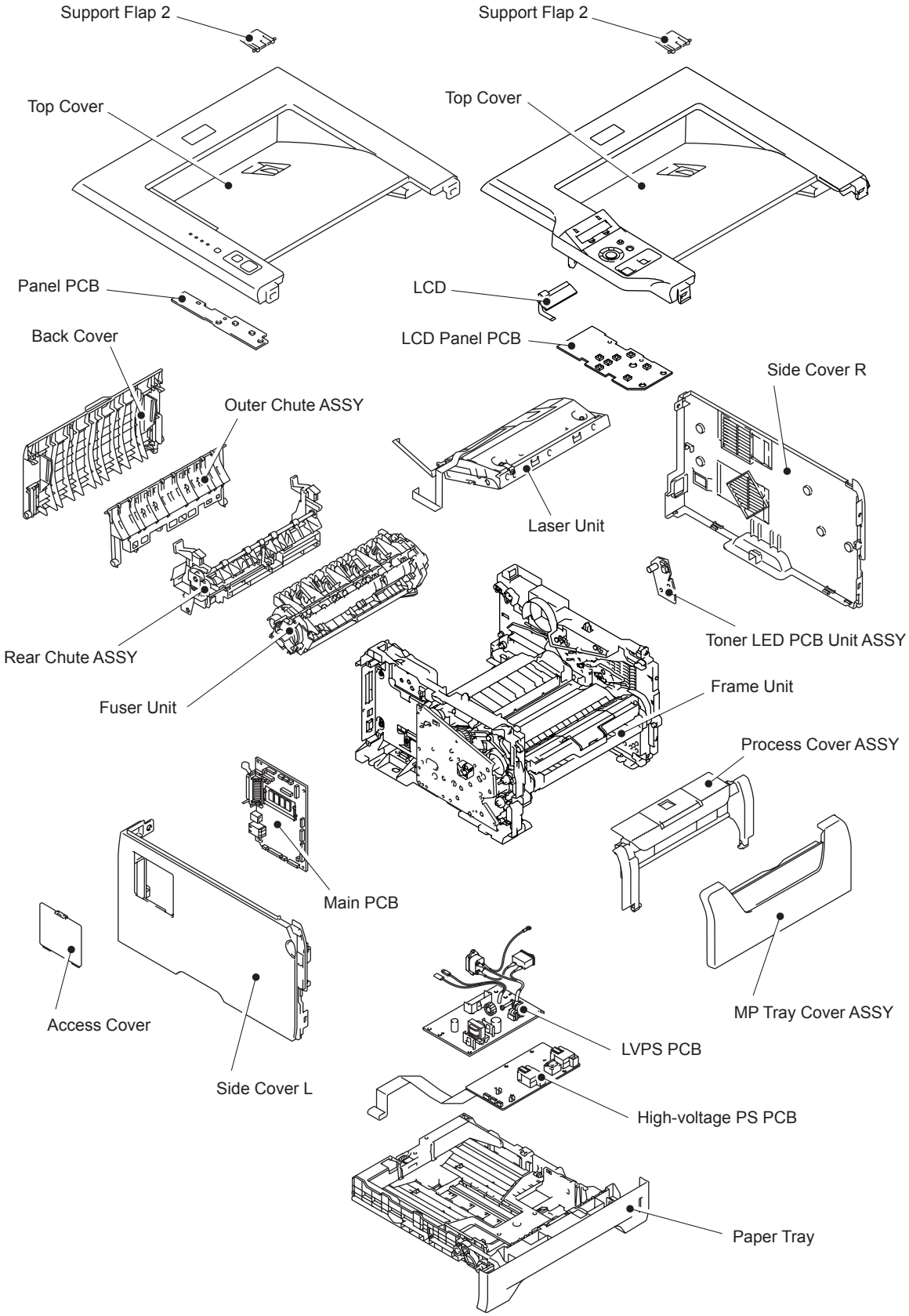

Fig. 3-1

1.3 Initial Check

Check the following items before attempting to repair the machine.

■ Operating Environment

(1) Put your machine on a flat, stable surface such as a desk that is free of vibration and shocks.

(2) Use the machine in a well-ventilated room; use the machine within the following ranges of temperature and humidity: temperature between 10°C and 32.5°C (50°F to 90.5°F), and the relative humidity is maintained between 20% and 80%.

(3) The machine is not exposed to direct sunlight, excessive heat, moisture, or dust.

■ Power Supply

(1) The AC input power supply described on the rating plate of the machine should be within ±10% of the rated voltage.

(2) The AC input power supply is within the regulated value.

(3) The cables and harnesses are connected correctly.

(4) The fuses are not blown.

■ Paper

(1) A recommended type of paper is being used.
(Refer to "2.6.2 Media specifications" in Chapter 1.)

(2) The paper is not damp.

(3) The paper is not short-grained paper or acid paper.

■ Consumable Parts

(1) The drum unit (including the toner cartridge) is installed correctly.

■ Others

(1) Condensation

When the machine is moved from a cold place into a warm room, condensation may occur inside the machine, causing various problems as listed below.

- Condensation on the optical surfaces such as the scanner window, lenses, the reflection mirror and the protection glass may cause the print image to be light.
- If the exposure drum is cold, the electrical resistance of the photosensitive layer is increased, making it impossible to obtain the correct contrast when printing.
- Condensation on the charge unit may cause corona charge leakage.
- Condensation on the plate and separation pad may cause paper feed failures.

If condensation has occurred, activate the Drum condensation countermeasure mode.
("3.2 Drum condensation countermeasure mode" in Chapter 7.)

If the drum unit is unpacked soon after it is moved from a cold place to a warm room, condensation may occur inside the unit which may cause incorrect images. Instruct the end user to allow the unit to come to room temperature before unpacking it. This will take one or two hours.

(2) Cleaning

Use a soft dry cloth.

warning

DO NOT use flammable substances such as alcohol, benzine, thinner or any type of spray to clean the inside or outside of the machine. Doing this may cause a fire or electrical shock.

2. DISTINGUISH ERROR CAUSE

2.1 LED indication (LED model)

2.1.1 LED indication at Operator Calls

Distinguish the contents of message by LED indication in the control panel. See the reference page and take the corrective action described for each indication to correct it. when the red Error LED is ON or blinking to indicate it, the machine automatically recovers from most errors. But some of errors are necessary to reset the machine by holding down the [Go] button.

LED indication of the following table is that

☐ LED is OFF, ■ LED is ON and ✳ LED is blinking.

LED	Type of error	Error clearance by pressing the [Go] button	Refer to:
Back Cover Toner Drum Paper Status Status : Red light ON	Front cover is opened	No	3-19
	Memory full	Yes	3-22
	Option tray is installed too much	No	3-24
	Print overrun	Yes	3-23
Back Cover Toner Drum Paper Status Status : Red light ON The **Back Cover** LED will turn on for 0.5 seconds and off for 0.5 seconds	Fuser cover is opened	No	3-20
	DX unit is not set	Yes	3-19

Confidential

LED	Type of error	Error clearance by pressing the [Go] button	Refer to:
Back Cover Toner Drum Paper Status Status : Red light ON	Toner life end	No	3-25
	Toner cartridge is not set	No	3-22
	Cannot detect toner	No	
Back Cover Toner Drum Paper Status Status : Red light ON The **Paper** LED will turn on for 0.5 seconds and off for 0.5 seconds	Mismatch paper size	Yes	3-24
	Paper is jammed in specified tray	No	3-20
	Paper is jammed in machine	No	
	Mismatch paper size in DX unit	Yes	3-24
	No tray	No	3-23
Back Cover Toner Drum Paper Status Status : Red light ON The **Back Cover** and **Paper** LED will turn on for 0.5 seconds and off for 0.5 seconds	Paper is jammed in backside machine	No	3-20
	Paper is jammed in DX unit	No	

Confidential

LED	Type of error	Error clearance by pressing the [Go] button	Refer to:
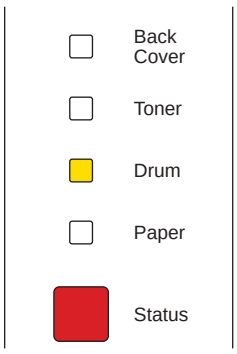 Status : Red light ON	Drum error	No	3-17
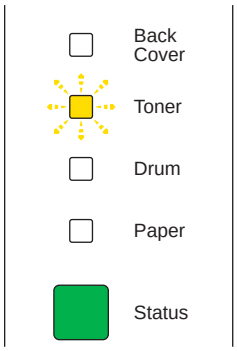 Status : Green light ON The **Toner** LED will turn on for 2 seconds and off for 3 seconds	Toner low	-	3-25
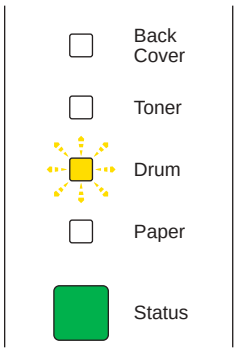 Status : Green light ON The **Drum** LED will turn on for 2 seconds and off for 3 seconds	Drum end soon	-	3-17

Confidential

LED	Type of error	Error clearance by pressing the [Go] button	Refer to:
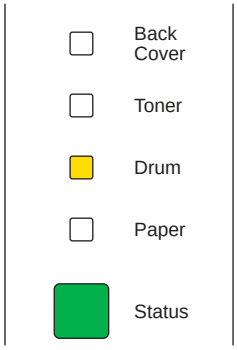 Status : Green light ON	Drum life end	-	3-23
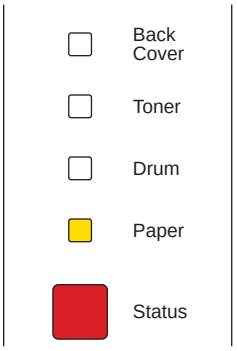 Status : Red light ON	No paper in specified tray	No	3-22

Confidential

2.1.2 LED indication at Service Calls

If service calls occur, all five LEDs blink on and off to notice it. And then when press the [Go] button, distinguish a fault from the specific combination of ON/OFF and status color of the LED.

When entering this state, instruct the end user to turn off the power switch, wait a few seconds and the same service call appears, see the reference page to take the corrective action.

Note :

- The back cover LED is not used to specify Service call error.

LED	Press the [Go] button and [Job Cancel] button once at the same time	Press the [Job Cancel] button twice while pressing the [Go] button	Type of error	Refer to:
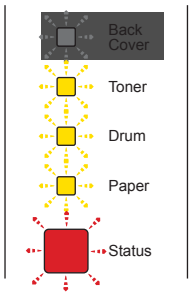 All LEDs will turn on for 0.5 seconds and off for 0.5 seconds	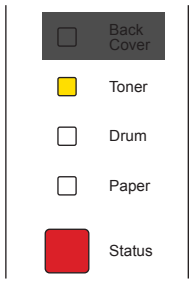 Status : Red light ON (Fuser unit error)	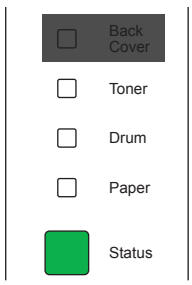 Status : Green light ON	Fuser NVRAM error	3-26
		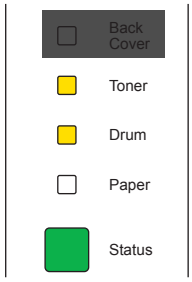 Status : Green light ON	Fuser low temperature error (60°C)	3-26
		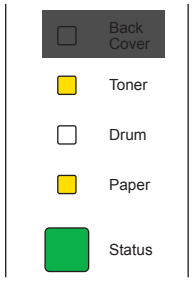 Status : Green light ON	Fuser abrupt Lower of temperature	3-26
		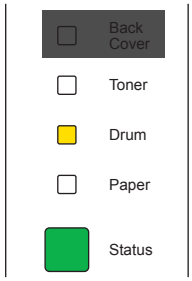 Status : Green light ON	Passed for 9 seconds till became 100°C from 60°C	3-26

LED	Press the [Go] button and [Job Cancel] button once at the same time	Press the [Job Cancel] button twice while pressing the [Go] button	Type of error	Refer to:
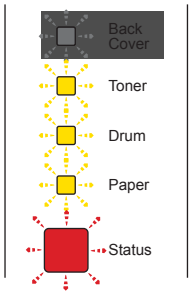 All LEDs will turn on for 0.5 seconds and off for 0.5 seconds	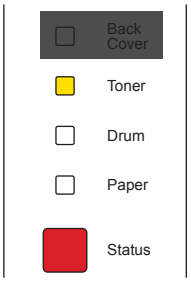 Status : Red light ON (Fuser unit error)	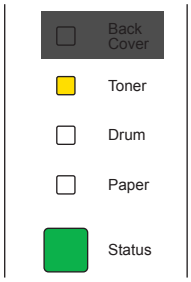 Status : Green light ON	Passed for 12 seconds till became 60°C from power-on	3-26
		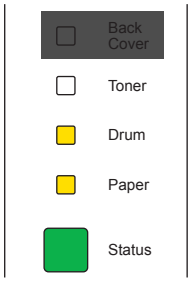 Status : Green light ON	Fuser abrupt rise of temperature	3-26
		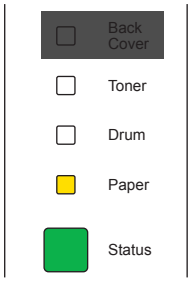 Status : Green light ON	Fuser high temperature error (270°C)	3-26
	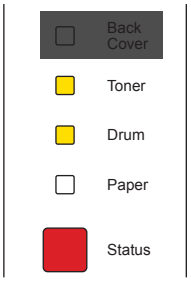 Status : Red light ON (Main PCB error)	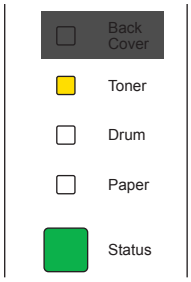 Status : Green light ON	Error S02 Error S03	3-25
		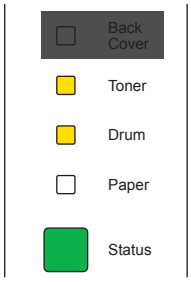 Status : Green light ON	Error S04 Error S05	3-25

Confidential

LED	Press the [Go] button and [Job Cancel] button once at the same time	Press the [Job Cancel] button twice while pressing the [Go] button	Type of error	Refer to:
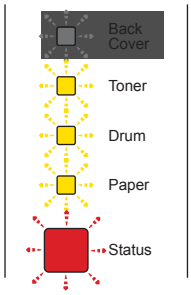 All LEDs will turn on for 0.5 seconds and off for 0.5 seconds	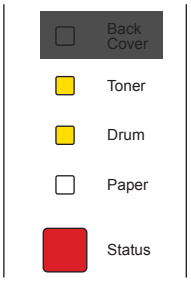 Status : Red light ON (Main PCB error)	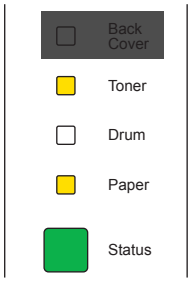 Status : Green light ON	Error S01 Error S06 Error S07 Error S08 Error S09 Error S10 Error S11 Error S12 Error S13	3-25
		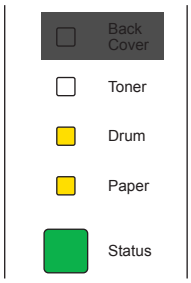 Status : Green light ON	Error H61 ROM Check sum Error	3-25
		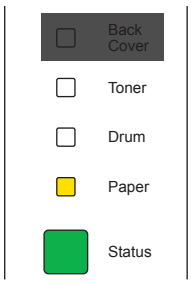 Status : Green light ON	Error H63 DRAM Access Error	3-25
		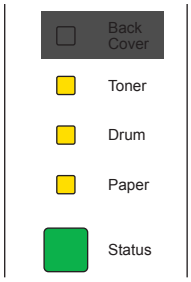 Status : Green light ON	Error H66 Error H67 Error H68 NVRAM WRITE/ READ/BUS Error	3-25
	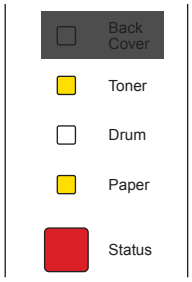 Status : Red light ON	—	DIMM memory error	3-16

Confidential

LED	Press the [Go] button and [Job Cancel] button once at the same time	Press the [Job Cancel] button twice while pressing the [Go] button	Type of error	Refer to:
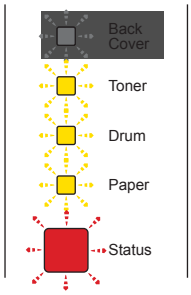 All LEDs will turn on for 0.5 seconds and off for 0.5 seconds	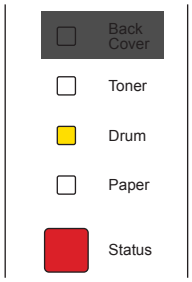 Status : Red light ON (Laser unit error)	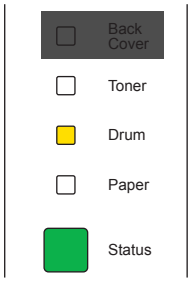 Status : Green light ON	Laser Beam detection failure	3-26
		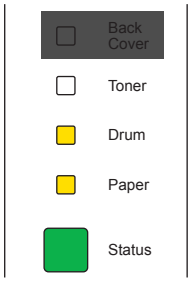 Status : Green light ON	Scanner Motor malfunction	3-26
	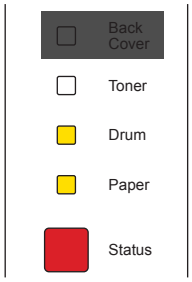 Status : Red light ON	—	High-voltage power supply error	3-27
	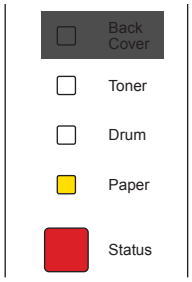 Status : Red light ON	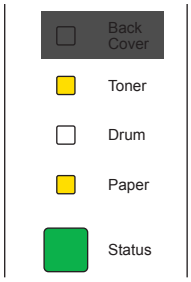 Status : Green light ON	Main motor lock error	3-26

LED	Press the [Go] button and [Job Cancel] button once at the same time	Press the [Job Cancel] button twice while pressing the [Go] button	Type of error	Refer to:
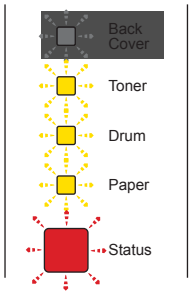 All LEDs will turn on for 0.5 seconds and off for 0.5 seconds	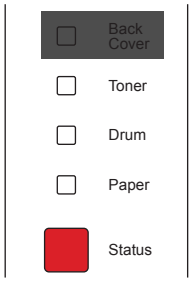 Status : Red light ON	—	Fan malfunction	3-27

Confidential

2.2 Error Message (LCD model)

2.2.1 Operator calls

An "Operator call" which the printer indicates on the LCD display is user recoverable. Identify the error from the table below and take the corrective action described for each indication to correct it. The printer automatically recovers from most errors. If not, the error is cleared by holding down the [Go] button on the control panel.

The LCD names for the paper trays are as follows.

- Upper paper tray: TRAY 1
- Multi-purpose tray: MP
- Optional Lower tray: TRAY 2 or TRAY 3

■ Error message

Error message	Type of error	Refer to:
BUFFER ERROR	Mistake the Interface settings.	3-16
CARTRIDGE ERROR	A new one cannot be detected for the operation failure of new toner actuator.	3-16
DIMM ERROR	The failed DIMM is installed, or the DIMM is not installed correctly.	3-16
DOWNLOAD FULL	Memory full.	3-16
DRUM END SOON	The drum unit reached its life and requires replacement.	3-17
DRUM ERROR	Dirt on drum unit. (Dirt on the corona wire)	3-17
DUPLEX DISABLED	The back cover is open, or the DX unit is not set.	3-19
FONT FULL	The number of the registration of the font is overflowed.	3-19
FRONT COVER OPEN	Front cover is opened.	3-19
FUSER COVER OPEN	Fuser cover is opened.	3-20
JAM XXX	No paper in Tray 1 (T1)/2 (T2)/3 (T3).	3-20
MANUAL FEED	No paper in MP tray.	3-21
MEMORY FULL	Memory full.	3-22
NO PAPER XXX	No paper in specified tray, or specified tray is not set.	3-22
NO TONER	No toner cartridge is detected.	3-22
NO TRAY XX	If feed from the T2/T3, the T1/T2 in the paper path is not installed.	3-23
PRINT OVERRUN	Print date capacity is flooded the memory capacity of machine.	3-23
REPLACE DRUM	Drum unit is the time for replacement.	3-23
REPLACE FUSER	Fuser unit is the time for replacement.	3-23
REPLACE LASER	Laser unit is the time for replacement.	3-23
REPLACE PF KIT 1 (2, 3, MP)	PF kit 1 (2, 3, MP) is the time for replacement.	3-24
SIZE ERROR DX	Specified paper size is not supported for duplex printing.	3-24

SIZE MISMATCH	Mismatch between specified paper size from the driver and setting paper in the tray.	3-24
STORAGE FULL	Memory full.	3-24
TOO MANY TRAYS	Option tray is installed more than three.	3-24
REPLACE TONER	Toner life end is detected. Developer count full.	3-25
TONER LOW	Low on toner.	3-25

2.2.2 Error indication at Service Calls

If LED indication does not operate when service calls occur, you can use a maintenance tool to distinguish the type of error.

Error indication (Printing of Printer Settings)	Error indication (Printing of Maintenance)	Type of error	Refer to:
ERROR S01	ERROR S01	■ **MAIN PCB FAILURE**	**3-25**
ERROR S02	ERROR S02		
ERROR S03	ERROR S03		
ERROR S04	ERROR S04		
ERROR S05	ERROR S05		
ERROR S06	ERROR S06		
ERROR S07	ERROR S07		
ERROR S08	ERROR S08		
ERROR S09	ERROR S09		
ERROR S10	ERROR S10		
ERROR S11	ERROR S11		
ERROR S12	ERROR S12		
ERROR S13	ERROR S13		
ERROR E49	FUSER MALF 2	■ **FUSER UNITFAILURE**	**3-26**
ERROR E50	FUSER MALF		
ERROR FUSER	ERROR FUSER		
ERROR E51	LASER BD MALF	■ **LASER UNIT FAILURE (Laser beam detection error)**	**3-26**
ERROR E52	SCANNER MALF	■ **LASER UNIT FAILURE (Scanner motor failure)**	**3-26**
ERROR E54	MOTOR MALF	■ **MAIN MOTOR FAILURE**	**3-26**
ERROR E55	HIGH VOL MALF	■ **HIGH-VOLTAGE POWER SUPPLY PCB FAILURE**	**3-27**
ERROR E60	ERROR E60	■ **FAN FAILURE**	**3-27**
ERROR H61	PROG ERROR	■ **MAIN PCB FAILURE**	**3-25**
ERROR H63	ERROR H63		
ERROR H66	NV-W ERROR		
ERROR H67	NV-R ERROR		
ERROR H68	NV-B ERROR		

2.3 Error Cause and Remedy

Memo :

- The following troubleshooting sections contain both the actions which end users should take or check and the ones which service technicians should perform.

■ BUFFER ERROR

Mistake the Interface settings.

Step	Cause	Remedy
1	Main PCB ASSY failure	Replace the main PCB ASSY.

■ CARTRIDGE ERROR

A new one cannot be detected for the operation failure of new toner actuator.

<User Check>

- Install the toner cartridges into the machine properly.

Step	Cause	Remedy
1	Power off or front cover opened while detecting a new toner cartridge.	Reset the developing bias voltage and develop roller counter. (Refer to "Developer Roller Counter Reset" in 1.3 Service Mode in Chapter 7.)
2	New toner actuator catching on some position	Re-assemble the new toner actuator.
3	New toner actuator failure	Replace the new toner actuator.
4	Relay front PCB ASSY failure	Replace the relay front PCB ASSY.

■ DIMM ERROR

The failed DIMM is installed, or the DIMM is not installed correctly.

<User Check>

- Install the DIMM correctly.

Step	Cause	Remedy
1	Main PCB ASSY failure	Replace the main PCB ASSY.

■ DOWNLOAD FULL

Memory full.

Step	Cause	Remedy
1	Main PCB ASSY failure	Replace the main PCB ASSY.

■ DRUM END SOON

The drum unit reached its life and requires replacement.

<User Check>

- Replace the drum unit with a new one.
- Reset the counter. (Refer to 2.2 Reset Parts Life Menu in Chapter 7.)

■ DRUM ERROR

Dirt on drum unit.

<User Check>

- Clean the corona wire in the drum unit.
- Replace the drum unit with a new one, and reset the drum counter.

Step	Cause	Remedy
1	Dirt or dust on drum unit electrodes	Clean the electrodes on the drum unit and the machine body (Refer to Fig. 3-2, Fig. 3-3).
2	High-voltage power supply PCB failure	Replace the high-voltage power supply PCB.
3	Main PCB ASSY failure	Replace the main PCB ASSY failure.

■ Electrodes location of the toner/drum unit

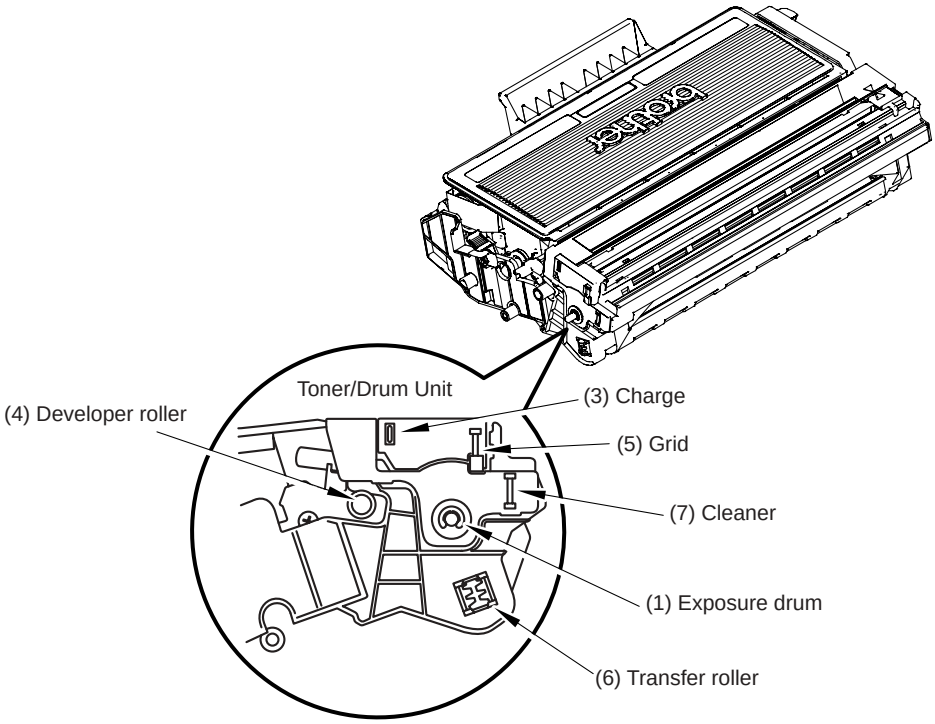

Fig. 3-2

■ Electrodes location of the machine

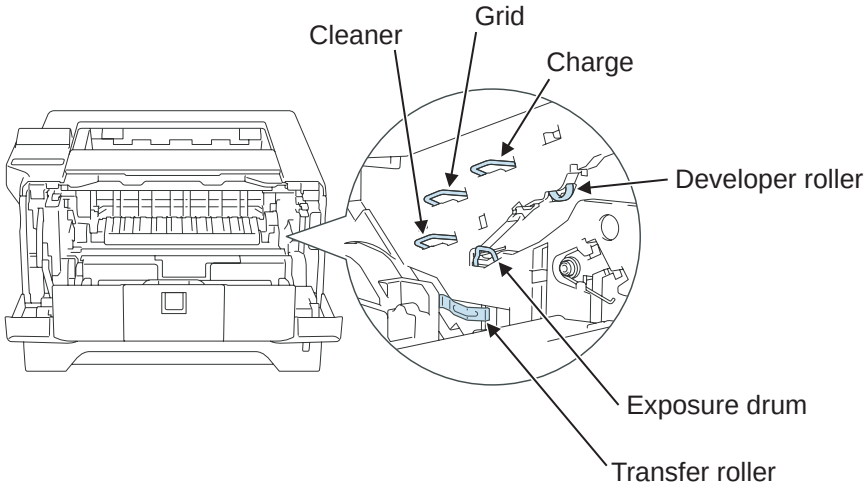

Fig. 3-3

<How to clean the electrodes>

Turn off the power switch. Unplug the machine from the AC power outlet, and leave the machine for a few minutes. Then, wipe the electrodes above carefully with a dry lint-free cloth. Be careful not to change the shapes of the electrodes.

■ DUPLEX DISABLED

The back cover is open, or the DX unit is not set.

<User Check>

- Close the back cover.
- Set the DX unit.

Step	Cause	Remedy
1	Harness connection failure of back cover sensor	Check the sensor performance following the procedure in "Factory Inspection Mode" in 1.3 Service Mode in Chapter 7. If any problem occurs, check the harness connection of the back cover sensor, then reconnect it.
2	Broken boss of back cover	Replace the back cover.
3	Back cover sensor failure	Replace the back cover sensor.
4	Main PCB ASSY failure	Replace the main PCB ASSY.

■ FONT FULL

The number of the registration of the font is overflowed.

<User Check>

- Cut down the registration of the font.
- Add on the DIMM.

Step	Cause	Remedy
1	Main PCB ASSY failure	Replace the main PCB ASSY.

■ FRONT COVER OPEN

Front cover is opened.

<User Check>

- Check if the front cover is closed certainly.

Step	Cause	Remedy
1	Harness connection failure of front cover sensor ASSY	Check the harness connection of the front cover sensor ASSY, and reconnect it.
2	Front cover sensor ASSY failure	Check the sensor performance following the procedure in "Factory Inspection Mode" in 1.3 Service Mode in Chapter 7. If any problem occurs, replace the front cover sensor ASSY.
3	Part pressing the front cover sensor is broken, which is provided at inside of process cover.	Replace the process cover ASSY.
4	Relay front PCB ASSY failure	Replace the relay front PCB ASSY.
5	Main PCB ASSY failure	Replace the main PCB ASSY.

■ FUSER COVER OPEN

Fuser cover is opened.

<User Check>

- Check if the fuser cover is closed certainly.

Step	Cause	Remedy
1	Paper eject actuator catching on some position	Correct catching of the paper eject actuator.
2	Harness connection failure of relay rear PCB ASSY	Check the harness connection of the relay rear PCB ASSY, and reconnect it.
3	Paper eject actuator failure	Replace the paper eject actuator.
4	Relay rear PCB ASSY failure	Replace the relay rear PCB ASSY.
5	Main PCB ASSY failure	Replace the main PCB ASSY.

■ JAM XXX

- **JAM TRAY 1/2/3/MP**

No paper in Tray 1 (T1)/2 (T2)/3 (T3).

<User Check>

- Check if the paper is jammed in the appropriate tray. If jammed, remove it.
- Adjust the paper guide corresponding to the paper size.
- Check if too much paper is loaded in the tray.

Step	Cause	Remedy
1	Dirt on edge sensor	Clean the edge sensor.
2	Edge actuator or registration front actuator catching on some position	Correct catching of the edge actuator or registration front actuator.
3	Paper feeding kit worn out	Replace the paper feeding kit.
4	Harness connection failure of High-Voltage PS PCB ASSY	Check the harness connections of the High-Voltage PS PCB ASSY, and reconnect it.
5	High-Voltage PS PCB ASSY failure	Check the edge sensor and registration front sensor performance following the procedure in "Factory Inspection Mode" in 1.3 Service Mode in Chapter 7. If any problem occurs, replace the High-Voltage PS PCB ASSY.
6	PE EG sensor ASSY failure	Replace the PE EG sensor ASSY.
7	Main PCB ASSY failure	Replace the main PCB ASSY.

- **JAM INSIDE/JAM REAR**

  Paper jam inside the machine.

  <User Check>

  - Check if the paper is jammed. If jammed, remove it.
  - Check if the fuser cover is closed certainly.

Step	Cause	Remedy
1	Harness connection failure of High-Voltage PS PCB ASSY or relay rear PCB ASSY	Check the harness connections of the High-Voltage PS PCB ASSY or relay rear PCB ASSY, and reconnect them.
2	Registration front actuator, registration rear actuator or paper eject actuator catching on some position	Correct catching of the registration front actuator, registration rear actuator or paper eject actuator.
3	Harness connection failure of registration solenoid	Check the harness connection of the registration solenoid, and reconnect it.
4a	Relay rear PCB ASSY failure	Check the sensor performance following the procedure in "Factory Inspection Mode" in 1.3 Service Mode in Chapter 7. If any problem occurs, replace the relay rear PCB ASSY.
4b	High-Voltage PS PCB ASSY failure	Check the sensor performance following the procedure in "Factory Inspection Mode" in 1.3 Service Mode in Chapter 7. If any problem occurs, replace the High-Voltage PS PCB ASSY.
5	Main PCB ASSY failure	Replace the main PCB ASSY.
6	Registration solenoid failure	Replace the registration solenoid.

■ MANUAL FEED

No paper in MP tray.

<User Check>

- Load the paper.

Step	Cause	Remedy
1	PE actuator MP catching on some position	Re-assemble the PE actuator MP.
2	Harness connection failure of MP PE sensor ASSY	Check the harness connection of the MP PE sensor ASSY, and reconnect it.
3	Harness connection failure of high-voltage PS PCB ASSY	Check the harness connection of the high-voltage PS PCB ASSY, and reconnect it.
4	MP PE sensor PCB ASSY failure	Replace the MP PE sensor PCB ASSY.
5	High-voltage PS PCB ASSY failure	Replace the high-voltage PS PCB ASSY.
6	Main PCB ASSY failure	Replace the main PCB ASSY.

■ MEMORY FULL

Memory full.

<User Check>

- Press the [Go] button, then print the stored data.
- Reduce the data capacity or reduce the print resolution.

■ NO PAPER XXX

No paper in specified tray, or specified tray is not set.

<User Check>

- Check if the paper is loaded into the paper tray correctly.
- Check if the paper tray is installed correctly.

Step	Cause	Remedy
1	Dirt on PE sensor	Clean the PE sensor.
2	PE actuator catching on some position	Re-assemble the PE actuator.
3	Harness connection failure of PE EG sensor PCB ASSY	Check the harness connection of the PE EG sensor PCB ASSY and connect it.
4	Harness connection failure of high-voltage PS PCB ASSY	Check the harness connection of the high-voltage PS PCB ASSY, and reconnect it.
5	PE EG sensor PCB ASSY failure	Replace the PE EG sensor PCB ASSY.
6	High-voltage PS PCB ASSY failure	Replace the high-voltage PS PCB ASSY.
7	Main PCB ASSY failure	Replace the main PCB ASSY.

■ NO TONER

No toner cartridge is detected.

<User Check>

- Install the toner cartridge.

Step	Cause	Remedy
1	Harness connection failure of toner sensor PCB unit ASSY	Check the sensor performance following the procedure in "Factory Inspection Mode" in 1.3 Service Mode in Chapter 7. If any problem occurs, check the harness connection of the toner sensor PCB unit ASSY and connect it.
2	Toner sensor PCB unit ASSY failure	Replace the toner sensor PCB unit ASSY.
3	Panel PCB ASSY failure	Replace the panel PCB ASSY.
4	Main PCB ASSY failure	Replace the main PCB ASSY.

■ NO TRAY XX

If feed from the T2/T3, the T1/T2 in the paper path is not installed.

<User Check>

- Install the T1 or T2.

Step	Cause	Remedy
1	Harness connection failure of PE EG sensor ASSY of T1 or T2	Check the sensor performance following the procedure in "Factory Inspection Mode" in 1.3 Service Mode in Chapter 7. If any problem occurs, check the harness connection of the PE EG sensor ASSY and connect it.
2	LT PCB ASSY failure	Replace the LT PCB ASSY.
3	Connector 55533-1219 failure	Replace the connector 55533-1219.
4	PE EG sensor PCB ASSY of T1 or T2 failure	Replace the PE EG sensor PCB ASSY of the T1 or T2.
5	Main PCB ASSY failure	Replace the main PCB ASSY.

■ PRINT OVERRUN

Print date capacity is flooded the memory capacity of machine.

<User Check>

- Reduce the complexity of data or reduce the print resolution.
- Add on the DIMM.

■ REPLACE DRUM

Drum unit is the time for replacement.

<User Check>

- Replace the drum unit.

■ REPLACE FUSER

Fuser unit is the time for replacement.

Step	Cause	Remedy
1	Fuser unit is the time for replacement	Replace the fuser unit and reset the counter. (Refer to "2.2 Reset Parts Life Menu" in Chapter 7.)

■ REPLACE LASER

Laser unit is the time for replacement.

Step	Cause	Remedy
1	Laser unit is the time for replacement	Replace the laser unit and reset the counter. (Refer to "2.2 Reset Parts Life Menu" in Chapter 7.)

■ REPLACE PF KIT1 (2, 3, MP)

PF kit 1 (2, 3, MP) is the time for replacement.

Step	Cause	Remedy
1	PF kit 1 (2, 3, MP) is the time for replacement	Replace the PF kit 1 (2, 3, MP) and reset the counter.(Refer to "2.2 Reset Parts Life Menu" in Chapter 7.)

■ SIZE ERROR DX

Specified paper size is not supported for duplex printing.

<User Check>

- Specify the paper size to A4/LETTER/FOLIO.

■ SIZE MISMATCH

Mismatch between specified paper size from the driver and setting paper in the tray.

<User Check>

- Match specified paper size from the driver with setting paper in the tray.

■ STORAGE FULL

Memory full.

<User Check>

- Install additional DIMM memory.

Step	Cause	Remedy
1	Main PCB ASSY failure	Replace the main PCB ASSY.

■ TOO MANY TRAYS

Option tray is installed more than three.

<User Check>

- Install the option tray to less than two.

Step	Cause	Remedy
1	Connector: 54702-1219 failure	Replace the connector: 54702-1219.
2	Main PCB ASSY failure	Replace the main PCB ASSY.

■ REPLACE TONER

Toner life end is detected. The number of the rotation for the develop roller reached upper limit.

<User Check>

- Replace the toner cartridge.

Step	Cause	Remedy
1	Harness connection failure of toner sensor PCB ASSY	Check the sensor performance following the procedure in "Factory Inspection Mode" in 1.3 Service Mode in Chapter 7. If any problem occurs, check the harness connection of the toner sensor PCB ASSY, then reconnect it.
2	Toner sensor PCB ASSY failure	Replace the toner sensor PCB ASSY.
3	Panel PCB ASSY failure	Replace the panel PCB ASSY.
4	Main PCB ASSY failure	Replace the main PCB ASSY.

■ TONER LOW

Low on toner.

<User Check>

- Replace the toner cartridge.

Step	Cause	Remedy
1	Harness connection failure of toner sensor PCB ASSY	Check the sensor performance following the procedure in "Factory Inspection Mode" in 1.3 Service Mode in Chapter 7. If any problem occurs, check the harness connection of the toner sensor PCB ASSY, then reconnect it.
2	Toner sensor PCB ASSY failure	Replace the toner sensor PCB ASSY.
3	Panel PCB ASSY failure	Replace the panel PCB ASSY.
4	Main PCB ASSY failure	Replace the main PCB ASSY.

■ MAIN PCB FAILURE

<User Check>

- Turn the power off and on.
- Remove the additional memory and replace it.

Step	Cause	Remedy
1	Bug in the software	Reinstall the latest firmware.
2	Main PCB failure	Replace the main PCB ASSY.

■ FUSER UNIT FAILURE

Step	Cause	Remedy
1	Harness connection failure between fuser unit connector and eject sensor PCB ASSY	Check the harness connection between fuser unit connector and eject sensor PCB ASSY and connect it.
2	Fuser unit failure	Replace fuser unit.
3	LVPS PCB failure	Replace the LVPS PCB unit.
4	Toner LED PCB failure	Replace the toner LED PCB ASSY.
5	Main PCB failure	Replace the main PCB ASSY.

CAUTION :

This problem will be cleared if turning off the power switch and turn on it again, then leave the machine power on for 15 minutes.
In the case of LED model, turn the power on while pressing the [Go] button, when the front cover is open. And check that Back cover/Toner/Drum/Paper LEDs light up, and then release the [Go] button. Check that all LEDs go off and press the [Go] button twice, and then this problem may be cleared by that press the [Go] button once again after all LEDs light up.
In the case of LCD model, turn the power on while pressing the [Go] button, when the front cover is open. And check that “USERS MODE” is displayed on the LCD, and then release the [Go] button. Check that **Data** LED go off and press the [Go] button twice, and then this problem may be cleared by that press the [Go] button once again after “USERS MODE” is displayed on the LCD in the state that the backlight lights up.

This operation will melt the fuser unit if the heater is hot. Leave the machine for 15 minutes and perform it after cooling down sufficiently.

■ LASER UNIT FAILURE

Laser diode failure/Polygon motor failure

Step	Cause	Remedy
1	Laser unit harness connection failure	Check the two harness connections of the laser unit and reconnect them.
2	FG harness ASSY connection failure	Check the FG harness ASSY connection between the laser unit and main PCB ASSY. Then reconnect it.
3	Laser unit failure	Replace the laser unit.
4	Main PCB failure	Replace the main PCB ASSY.

■ MAIN MOTOR FAILURE

Step	Cause	Remedy
1	Main motor harness connection failure	Check the harness connection of the main motor and reconnect it.
2	Main motor becomes abnormal load.	Remove the motor load cause to turn the each gears.
3	Main motor failure	Replace the drive sub ASSY.
4	LVPS PCB failure	Replace the LVPS PCB unit.
5	Main PCB failure	Replace the main PCB ASSY.

■ HIGH-VOLTAGE POWER SUPPLY PCB FAILURE

Step	Cause	Remedy
1	High-voltage power supply PCB ASSY electrode dirty	Clean the electrodes on the High-voltage power supply PCB ASSY.
2	High-voltage power supply PCB ASSY harness connection failure	Check the harness connection between the high-voltage power supply PCB and main PCB. Then reconnect it.
3	High-voltage power supply PCB failure	Replace the high-voltage power supply PCB ASSY.
4	LVPS PCB failure	Replace the LVPS PCB unit.
5	Main PCB failure	Replace the main PCB ASSY.

■ FAN FAILURE

Step	Cause	Remedy
1	Fan harness connection failure	Check the harness connection of the fan motor 60 unit, and reconnect it.
2	Fan failure	Replace the fan motor 60 unit.
3	Toner LED PCB failure	Replace the toner LED PCB ASSY.
4	Main PCB failure	Replace the main PCB ASSY.

■ NO POWER SUPPLIED

Step	Cause	Remedy
1	Harness connection failure of panel PCB	Reconnect the panel PCB ASSY harness.
2	AC cord failure	Replace the AC cord.
3	Panel PCB failure	Replace the panel PCB ASSY.
4	LVPS PCB failure	Replace the LVPS PCB ASSY.
5	Main PCB ASSY failure	Replace the main PCB ASSY.

■ PICKUP FUNCTION OF PAPER TRAY DOES NOT WORK

Step	Cause	Remedy
1	Link lever catching on some position	Re-assemble the link lever.
2	Roller holder ASSY catching on some position	Re-assemble the roller holder ASSY catching on some position.
3	Roller holder ASSY failure	Replace the roller holder ASSY.
4	Main motor failure	Replace the main motor.
5	Pressure plate drive cam failure	Replace the frame L.
6	Main PCB ASSY failure	Replace the main PCB ASSY.

■ NEW TONER IS NOT DETECTED

Step	Cause	Remedy
1	New toner actuator catching on some position	Re-assemble the new toner actuator.
2	New toner actuator spring loose	Re-assemble the new toner actuator spring.
3	New toner sensor PCB ASSY harness connection failure	Check the sensor performance following the procedure in "Factory Inspection Mode" in 1.3 Service Mode in Chapter 7. If any problem occurs, check the harness connection of the new toner sensor PCB ASSY, then reconnect it.
4	New toner actuator failure	Replace the new toner actuator.
5	New toner sensor PCB ASSY failure	Replace the new toner sensor PCB ASSY.
6	Main PCB ASSY failure	Replace the main PCB ASSY.

■ LED FAILURE

Step	Cause	Remedy
1	Panel PCB harness connection failure	Check the harness connection of the panel PCB, then reconnect it.
2	Panel PCB failure	Replace the panel PCB.
3	Main PCB ASSY failure	Replace the main PCB ASSY.

■ LCD failure

Step	Cause	Remedy
1	Panel PCB harness connection failure	Check the harness connection of the panel PCB, then reconnect it.
2	LCD harness connection failure	Check the harness connection of the LCD, then reconnect it.
3	Panel PCB failure	Replace the panel PCB.
4	Main PCB ASSY failure	Replace the main PCB ASSY.

■ PRINTER STOPS WHILE IDLING

Step	Cause	Remedy
1	Front cover is opened	Replace the front cover.
2	Process unit electrode dirty	Clean the electrodes on the process unit. (Refer to Fig. 3-2.)
3	Main PCB ASSY failure	Replace the main PCB ASSY.

Idling: To keep the toner evenly without one-sided. When turn the power ON or start the printing, Turn the exposure drum or develop roller before stating the printing.

3. PAPER FEEDING PROBLEMS

Problems related to paper feeding are end user recoverable if following the User Check items. If the same problem occurs again, follow each procedure in the order of the number described in the Step column in the tables below.

3.1 No Feeding

Step	Cause	Check	Result	Remedy
1	Dirt on PE sensor	Is there paper powder in the PE sensor?	Yes	Clean the PE sensor.
2	Edge actuator catching on some position	Does the edge actuator move smoothly?	No	Re-assembly the edge actuator.
3	Roller holder ASSY catching on some position	Does the roller holder ASSY move smoothly?	Yes	Re-assembly the roller holder ASSY.
4	Registration front sensor failure	Is the problem solved after replacing the registration front sensor PCB ASSY?	Yes	Replace the registration front sensor PCB ASSY.
5	Separation pad or roller holder ASSY failure	Is the surface of the separation pad or the pickup roller dirty or worn out?	Yes	1) Clean the surface of the separation pad or pickup roller. 2) Replace the separation pad or pickup roller.
6	Pressure plate gear damage	Is the pressure plate gear damaged?	Yes	Replace the paper tray.
7	T1 solenoid failure	Does the T1 solenoid work correctly?	No	Replace the T1 solenoid.
8	T1 solenoid pathway of the high-voltage power supply PCB broken	Is the problem solved after replacing the high-voltage power supply PCB ASSY?	Yes	Replace the high-voltage power supply PCB ASSY.
9	Main PCB failure	Is the problem solved after replacing the main PCB ASSY?	Yes	Replace the main PCB ASSY.
10	Main motor failure	Is the problem solved after replacing the drive sub ASSY?	Yes	Replace the drive sub ASSY.

3.2 Double Feeding

Step	Cause	Check	Result	Remedy
1	Separation pad or roller holder ASSY failure	Is the surface of the separation pad worn out?	Yes	Replace the PF kit.

3.3 Paper Jam

■ Paper jam in the paper tray and front cover

Step	Cause	Check	Result	Remedy
1	Dirt on edge sensor	Is there paper powder on the edge sensor?	Yes	Clean the edge sensor.
2	Registration front actuator/edge actuator catching on some position	Does the registration front actuator/edge actuator move smoothly?	No	Re-assemble the registration front actuator/ edge actuator.
3	Registration front sensor PCB (registration front actuator/edge actuator failure)	Does the registration front sensor move smoothly? (Check it following the procedure described in "Factory Inspection Mode" in 1.3 Service Mode in Chapter 7)	No	Replace the registration front sensor PCB ASSY.
4	Registration solenoid failure	Is the problem solved after replacing the registration solenoid?	Yes	Replace the registration solenoid.
5	Toner LED PCB failure	Is the problem solved after replacing the toner LED PCB ASSY?	Yes	Replace the toner LED PCB ASSY.
6	High-voltage power supply PCB failure	Is the problem solved after replacing the High-voltage power supply PCB ASSY?	Yes	Replace the High-voltage power supply PCB ASSY.
7	Main PCB failure	Is the problem solved after replacing the Main PCB ASSY?	Yes	Replace the Main PCB ASSY.

■ Paper jam in the back cover and paper eject section

Step	Cause	Check	Result	Remedy
1	Foreign object around fuser unit	Is there a foreign object around the fuser unit?	Yes	Remove the foreign object.
2	Paper eject actuator failure	Does the paper eject actuator move smoothly? Is it damaged?	No	Replace the paper eject actuator.
3	Fuser cover ASSY loose	Is the fuser cover ASSY fitted correctly?	No	Fit the fuser cover ASSY correctly.
4	Outer chute ASSY loose	Is the outer chute ASSY fitted correctly?	No	Fit the outer chute ASSY fitted correctly.
5	Eject roller 2 malfunction	Is each pinch roller of the inner chute ASSY attached to each eject roller 2 of top cover ASSY properly?	No	Replace the inner chute ASSY.
6	Paper eject sensor PCB failure	Is the problem solved after replacing the paper eject sensor PCB?	Yes	Replace the paper eject sensor PCB ASSY.

■ Paper jam in the tray 2/tray 3

Step	Cause	Check	Result	Remedy
1	Dirt on LT edge sensor	Is there paper powder on the LT edge sensor?	Yes	Clean the LT edge sensor.
2	LT edge actuator catching on some position	Does the LT edge actuator move smoothly?	No	Re-assemble the LT edge actuator.
3	LT sensor PCB ASSY failure	Is the problem solved after replacing the LT sensor PCB ASSY?	Yes	Replace the LT sensor PCB ASSY.
4	LT solenoid failure	Is the problem solved after replacing the LT solenoid?	Yes	Replace the LT solenoid.

■ Paper jam in the DX unit section

Step	Cause	Check	Result	Remedy
1	DX unit failure	Is the problem solved after replacing the DX unit?	Yes	Replace the DX unit.

3.4 Dirt on Paper

<User Check>

- Check if the paper is loaded into the paper tray correctly.
- Turn over the stack of paper in the paper tray, or try rotating the paper 180° in the paper tray.

Step	Cause	Check	Result	Remedy
1	Fuser unit dirty	Is there dirt around the entrance of the fuser unit?	Yes	Clean the entrance of the fuser unit.
		Is the pressure roller ASSY dirty?	Yes	Clean the pressure roller ASSY.

3.5 Wrinkles or creases

<User Check>

- Check if the paper is loaded into the paper tray correctly.
- Turn over the stack of paper in the paper tray, or try rotating the paper 180° in the paper tray.

Step	Cause	Check	Result	Remedy
1	Fuser unit dirty	Is there dirt around the entrance of the fuser unit?	Yes	Clean the entrance of the fuser unit.
2	Fuser unit failure	Is the problem solved if new fuser unit is replaced?	Yes	Replace the fuser unit.

3.6 Waves in the paper / folds in the paper at the eject roller 2

<User Check>

- Check that the problem is solved if new paper is used.

Step	Cause	Check	Result	Remedy
1	Foreign object around eject roller 2	Is there a foreign object around the eject roller 2?	Yes	Remove the foreign object.
2	Eject roller 2 failure	Is the problem solved after replacing the new eject roller 2?	Yes	Replace the top cover ASSY.

3.7 Curl in the paper

The curl in the left figure.

<User Check>

- Change the paper.

Step	Cause	Check	Result	Remedy
1	Mismatch the setting the paper and the eject roller 1	Is the problem solved by changing the position of the anti-curl lever ?	Yes	Change the position of the anti-curl lever.

Slide the lever 2 to the right while pushing up the lever 1 to the direction of the arrow.

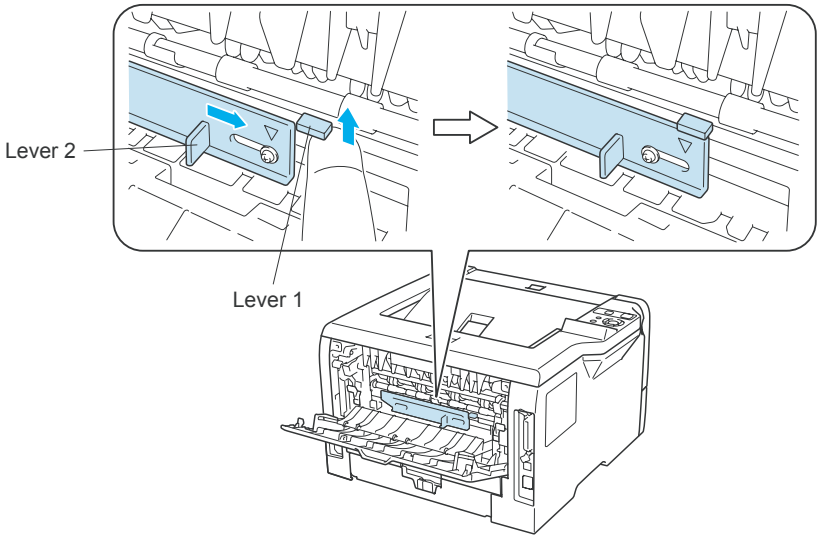

Fig. 3-4

3.8 Prints only single side of the paper when duplex-printing

Step	Cause	Check	Result	Remedy
1	Used small paper	Is the A4/LETTER used?	No	Use the paper of the A4/ LETTER.

4. TROUBLESHOOTING FOR PRINT IMAGE DEFECT

4.1 Image Defect Examples

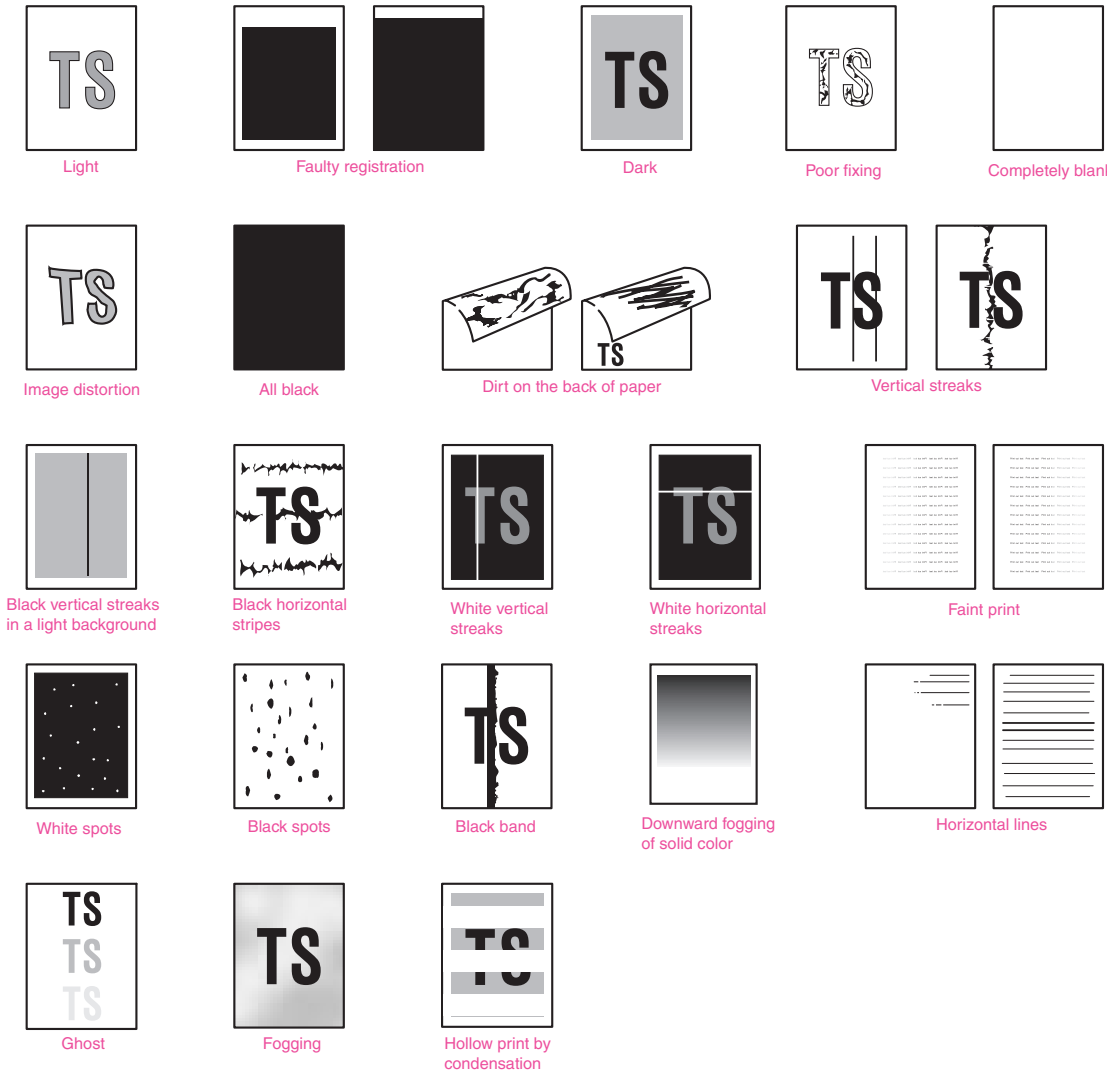

Fig. 3-5

4.2 Diameter of Rollers

Image defects which appear periodically may be caused by failure of a roller. Specify the cause referring to the diameter of the rollers or pitch which appears in the image as shown in the table below.

No.	Parts name	Diameter	The pitch which appears in the image
1	Develop roller	Ø20.0 mm	42.5 mm
2	Exposure drum	Ø30.0 mm	94.2 mm
3	Heat roller in the fuser unit	Ø25.0 mm	78.5 mm
4	Pressure roller ASSY in the fuser unit	Ø25.0 mm	78.5 mm
5	Registration roller	Ø14.0 mm	44.0 mm
6	Transfer roller	Ø15.2 mm	48.2 mm

4.3 Troubleshooting for Image Defect

Image defect related problems are end user recoverable if following the User Check items. If the same problem occurs, follow each procedure in the order of the number described in the Step column in the tables below.

■ Light

TS

<User Check>

- Check the machine's environment. Low temperature and low humidity conditions can cause this problem.
- If the whole page is light, toner save mode may be on.
- Replace the toner cartridge or drum unit with a new one.

Step	Cause	Check	Result	Remedy
1	Dirt on exposure drum electrode	Are the electrodes of the drum unit and machine body dirty?	Yes	Clean both electrodes. (Refer to Fig. 3-2, Fig. 3-3.)
2	Dirt on scanner windows of the laser unit	Is the scanner windows of the laser unit dirty?	Yes	Wipe the dirt off with a soft, clean, lint free cloth. (Refer to Fig. 3-6.)
3	Toner sensor failure	After replacing the toner cartridge with a new one, does the same problem occur even after printing several pages?	No	Replace the toner cartridge.
4		Does the machine start printing even after removing the toner cartridge from the drum unit?	Yes	Clean the toner sensor. (receiving light side / emitting light side) Check the harness connection of the toner LED PCB ASSY. (luminescence side) Replace the toner sensor PCB ASSY or toner LED PCB ASSY.
5	Between the HVPS PCB/Main PCB connection failure	Is the harness of the HVPS PCB ASSY and main PCB ASSY connected correctly?	Yes	Reconnect the harness of the HVPS PCB ASSY and main PCB ASSY.
6	HVPS PCB failure	Is the problem solved after replacing the HVPS PCB ASSY?	Yes	Replace the HVPS PCB ASSY.
7	Main PCB failure	Is the problem solved after replacing the main PCB ASSY?	Yes	Replace the main PCB ASSY.
8	Laser unit failure	Is the problem solved after replacing the laser unit?	Yes	Replace the laser unit.

<Location of the leser beam window>

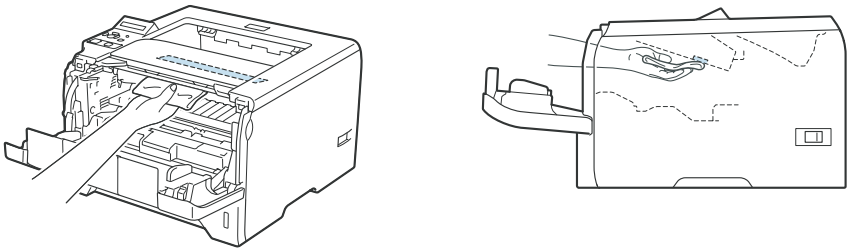

Fig. 3-6

■ Faulty registration

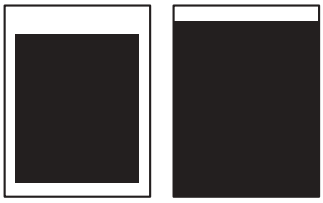

<User Check>

- Check that the appropriate media type is selected in the printer driver.

Step	Cause	Check	Result	Remedy
1	Registration rear actuator catching on some position	Does the registration rear actuator move smoothly?	No	Re-assemble the registration rear actuator.
2	Drum unit failure	Is the rotation torque of the drum unit heavy?	Yes	Replace the drum unit.

■ Dark

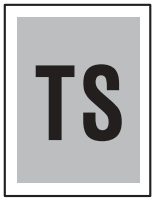

<User Check>

- Check the machine's environment. High temperature and high humidity conditions can cause this problem.
- Replace the drum unit with a new one.
- Replace the toner cartridge with a new one.

Step	Cause	Check	Result	Remedy
1	Drum unit electrode dirty	Is the electrode of the drum unit dirty?	Yes	Clean the electrode.
2	Drum unit failure	Is the problem solved after replacing the drum unit?	Yes	Replace the drum unit.
3	Developing bias malfunciton	Is the problem solved after reseting the developer roller counter?	Yes	Reset the developer roller counter.
4	HVPS PCB failure	Is the problem solved after replacing the HVPS PCB ASSY?	Yes	Replace the HVPS PCB ASSY.
5	Main PCB failure	Is the problem solved after replacing the main PCB ASSY?	Yes	Replace the main PCB ASSY.

■ Poor fixing

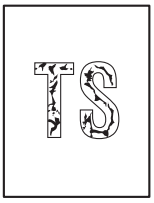

<User Check>

- Replace the drum unit with a new one.
- Replace the toner cartridge with a new one.

Step	Cause	Check	Result	Remedy
1	Low pressure of pressure roller in the fuser unit	Is the problem solved by changing the position of the anti-curl lever ?	Yes	Change the position of the anti-curl lever.
2	Fuser unit failure	Is the problem solved after replacing the fuser unit?	Yes	Replace the fuser unit.
3	Toner sensor failure	Is the "Toner life End" message indicated on the LCD after replacing the current toner cartridge with an empty one?	No	Replace the toner sensor.
4	HVPS PCB failure	Is the problem solved after replacing the HVPS PCB ASSY?	Yes	Replace the HVPS PCB ASSY.
5	Main PCB failure	Is the problem solved after replacing the main PCB ASSY?	Yes	Replace the main PCB ASSY.
6	LVPS PCB failure	Is the problem solved after replacing the LVPS PCB unit?	Yes	Replace the LVPS PCB unit.

■ Completely blank

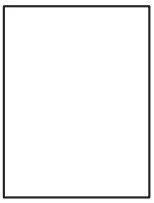

<User Check>

- Replace the drum unit with a new one.
- Replace the toner cartridge with a new one.

Step	Cause	Check	Result	Remedy
1	Developing bias voltage conduction failure	Are the electrodes on the drum unit and machine body dirty?	Yes	Clean both electrodes. (Refer to Fig. 3-2, Fig. 3-3.)
2	Scanner harness of the laser unit connection failure	Is the scanner harness of the laser unit connected securely?	No	Reconnect the scanner harness of the laser unit.
3	Laser unit failure	Is the problem solved after replacing the laser unit?	Yes	Replace the laser unit.
4	HVPS PCB failure	Is the problem solved after replacing the HVPS PCB ASSY?	Yes	Replace the HVPS PCB ASSY.
5	Main PCB failure	Is the problem solved after replacing the main PCB ASSY?	Yes	Replace the main PCB ASSY.

■ Image distortion

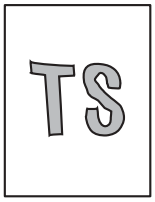

Step	Cause	Check	Result	Remedy
1	Laser unit not assembled correctly	Is the laser unit assembled into the machine securely? (Check if there is no gap.)	No	Assemble the laser unit correctly and secure the screw.
2	Incorrect radiation angle of scanner diode of laser unit. Scanner motor rotation failure	Is the problem solved after replacing the laser unit?	Yes	Replace the laser unit.
3	Main PCB failure	Is the problem solved after replacing the main PCB ASSY?	Yes	Replace the main PCB ASSY.

■ All black

Step	Cause	Check	Result	Remedy
1	Corona wire failure	Are the electrodes on the drum unit and machine body dirty?	Yes	Clean both electrodes. (Refer to Fig. 3-2, Fig. 3-3.)
2		Is the corona wire damaged?	Yes	Replace the drum unit.
3	Scanner harness of the laser unit connection failure	Is the scanner harness of the laser unit connected securely?	No	Reconnect the scanner harness of the laser unit.
4	FG harness ASSY connection failure	Is the FG harness ASSY between the laser unit and main PCB ASSY connected securely?	No	Reconnect the FG harness ASSY between the laser unit and main PCB ASSY securely.
5	HVPS PCB failure	Is the problem solved after replacing the HVPS PCB ASSY?	Yes	Replace the HVPS PCB ASSY.
6	Main PCB failure	Is the problem solved after replacing the main PCB ASSY?	Yes	Replace the main PCB ASSY.
7	Laser unit failure	Is the problem solved after replacing the laser unit?	Yes	Replace the laser unit.

Confidential

■ Dirt on the back of paper

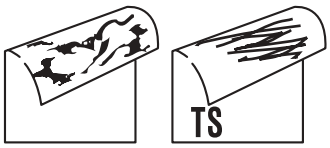

<User Check>

- This problem may disappear after printing approximately 10 pages of completely blank sheets.

Step	Cause	Check	Result	Remedy
1	Scratch and Dirt on the fuser unit	Is the pressure roller ASSY dirty? Is any other area in the machine dirty?	Yes	Print approximate 10 pages.
			No	Replace the fuser unit.
2	Scratch and Dirt in the paper feed system	Is the paper feed system dirty?	Yes	Wipe dirt off.

■ Vertical streaks

<User Check>

- This problem may occur with noise which is caused by dirt on the corona wire in the drum unit. In this case, clean the corona wire with the wire cleaner.
- Replace the drum unit with a new one.
- Replace the toner cartridge with a new one.

Step	Cause	Check	Result	Remedy
1	Scratch and Dirt in the paper feed system	Is the paper feed system dirty?	Yes	Wipe dirt off.
2	Scratch and Dirt on the exposure drum	Are there scratch and dirt on the surface of the exposure drum?	Yes	Replace the drum unit.
3	Scratch and Dirt on the heat roller	Are there scratch and dirt on the surface of the heat roller?	Yes	Replace the fuser unit.

CAUTION :

- If the machine prints the same pattern, especially including vertical streaks, continuously, black vertical streaks may appear on the paper since the electrostatic performance of the exposure drum is decreased temporally.

■ Black vertical streaks in a light background

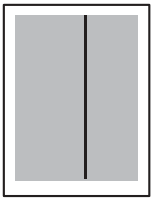

<User Check>

- Clean the inside of the machine and the corona wire in the drum unit.
- Replace the toner cartridge with a new one.

Step	Cause	Check	Result	Remedy
1	Drum unit failure	Is the problem solved after replacing the drum unit?	Yes	Replace the drum unit.

■ Black horizontal stripes

<User Check>

- Clean the inside of the machine and the corona wire in the drum unit.
- Replace the drum unit with a new one.

Step	Cause	Check	Result	Remedy
1	Dirt on the charged electrode	Are the electrodes on the drum unit and machine body dirty?	Yes	Clean both electrodes. (Refer to Fig. 3-2, Fig. 3-3.)
2	Paper tray ground terminal provided in the machine body	Is the paper tray ground terminal bent, which is provided in the machine body? (Refer to Fig. 3-7.)	Yes	Correct bending of paper tray ground terminal.
3	Toner attached on the develop roller	Are the horizontal stripes at 42.5 mm (develop roller circumference) intervals?	Yes	This problem will disappear by printing approximate 10 pages. If the same problem occurs, replace the toner cartridge.
4	Scratch and Dirt on the exposure drum	Are the horizontal stripes at 94.2 mm (exposure drum circumference) intervals?	Yes	Replace the drum unit.
5	Scratch and Dirt on the heat roller	Are the horizontal stripes at 78.5 mm (heat roller circumference) intervals?	Yes	Replace the fuser unit.
6	HVPS PCB failure	Is the problem solved after replacing the HVPS PCB ASSY?	Yes	Replace the HVPS PCB ASSY.
7	Main PCB failure	Is the problem solved after replacing the main PCB ASSY?	Yes	Replace the main PCB ASSY.

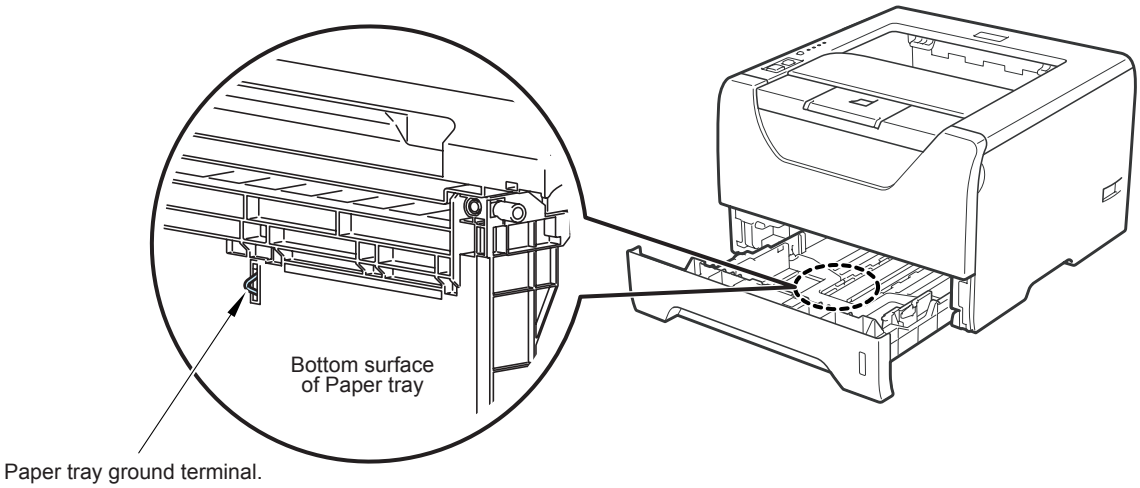

Fig. 3-7

■ White vertical streaks

<User Check>

- Clean the scanner windows of the laser unit with a soft lint-free cloth. (Refer to Fig. 3-6.)
- Replace the toner cartridge with a new one.
- Check the machine's environment. High temperature and high humidity conditions can cause this problem.
- Damp (wet) paper might be used. Try to change to freshly unpacked paper.
- Check if there is no dust in the gap between the toner cartridge and drum frame.

Step	Cause	Check	Result	Remedy
1	Condensation	Has condensation occurred inside the machine?	Yes	Try to print several pages or activate the Drum condensation countermeasure mode. ("3.2 Drum condensation countermeasure mode" in Chapter 7.)
2	Transfer failure	Is the transfer roller scratched?	Yes	Replace the drum unit.
3	Scanner windows of laser unit failure	Is the problem solved after replacing the laser unit?	Yes	Replace the laser unit.

■ White horizontal streaks

<User Check>

- Check that the appropriate media type is selected in the printer driver.
- The problem may disappear by itself. Try printing multiple pages to clear this problem especially if the machine has not been used for a long time.
- The drum unit may be damaged. Replace the drum unit with a new one.

Step	Cause	Check	Result	Remedy
1	Toner cartridge electrode contact failure	Are the electrodes on the toner cartridge and machine body dirty?	Yes	Clean both electrodes. (Refer to Fig. 3-2, Fig. 3-3.)
2	Drum unit electrode contact failure	Are the electrodes on the drum unit and machine body dirty?	Yes	Clean both electrodes. (Refer to Fig. 3-2, Fig. 3-3.)

■ Faint print

<User Check>

- Check that the machine is installed on a level surface.
- Replace the toner cartridge with a new one.
- Clean the scanner windows of the toner unit with a soft cloth. (Refer to Fig. 3-6.)
- The drum unit may be damaged. Replace the drum unit with a new one.

Step	Cause	Check	Result	Remedy
1	Main PCB failure	Is the problem solved after replacing the main PCB ASSY?	Yes	Replace the main PCB ASSY.
2	Laser unit failure	Is the problem solved after replacing the laser unit?	Yes	Replace the laser unit.
3	Toner empty sensor failure	Is the "Toner Life End" message indicated on the LCD after replacing the current toner cartridge with a new one?	No	Replace the toner sensor PCB ASSY.

■ White spots

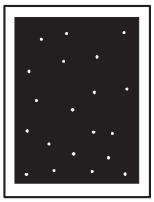

<User Check>

- Toner may be empty. Replace the toner cartridge with a new one.
- If the problem is not solved after printing a few pages, the drum unit may have glue from label stock on the exposure drum surface. Refer to the next page, and wipe it off gently with a cotton swab.
- The drum unit may be damaged. Replace the drum unit with a new one.

Step	Cause	Check	Result	Remedy
1	Toner attached on the develop roller	Are the white spots at 42.5 mm (develop roller circumference) intervals?	Yes	This problem will disappear by printing approximate 10 pages. If the same problem occurs, replace the toner cartridge.
2	Scratch and Dirt on the exposure drum	Are the white spots at 94.2 mm (develop roller circumference) intervals?	Yes	Replace the drum unit.
3	Drum unit connection failure	Are the electrodes on the drum unit and machine body dirty?	Yes	Clean both electrodes. (Refer to Fig. 3-2, Fig. 3-3.)
4	HVPS PCB failure	Is the problem solved after replacing the HVPS PCB ASSY?	Yes	Replace the HVPS PCB ASSY.
5	Main PCB failure	Is the problem solved after replacing the main PCB ASSY?	Yes	Replace the main PCB ASSY.

<Clean the drum unit as follows>

If you have print quality problems, clean the drum unit as follows:

(1) Put the print sample in front of the drum unit, and find the exact position of the poor print.

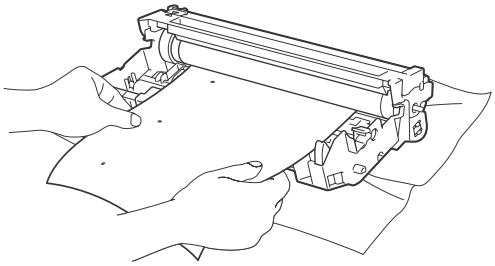

Fig. 3-8

(2) Turn the drum unit gear to the direction of the arrow of the figure by hand while looking at the surface of the exposure drum.

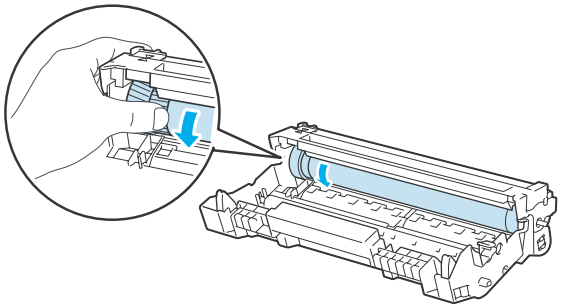

Fig. 3-9

(3) When you have found the mark on the drum that matches the print sample, wipe the surface of the exposure drum with a dry cotton swab until the dust or glue on the surface comes off.

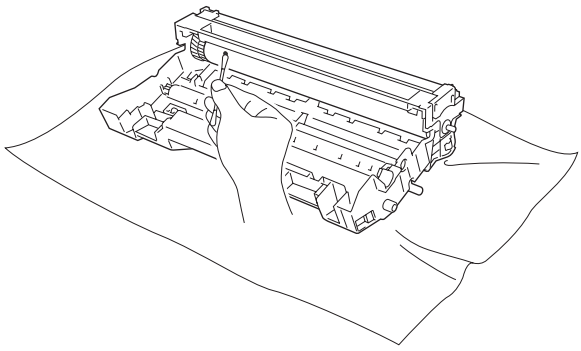

Fig. 3-10

CAUTION :

- DO NOT clean the surface of the photosensitive drum with a sharp object.

■ Black spots

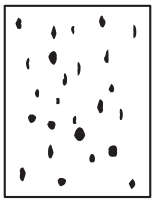

<User Check>

- Damp (wet) paper might be used. Try to change to freshly unpacked paper.
- Toner may be empty. Replace the toner cartridge with a new one.
- If the problem is not solved after printing a few pages, the drum unit may have glue from label stock on the exposure drum surface. Refer to the previous page, and wipe it off gently with a cotton swab.
- The drum unit may be damaged. Replace the drum unit with a new one.

Step	Cause	Check	Result	Remedy
1	Toner attached on the develop roller	Are the black spots at 42.5 mm (develop roller circumference) intervals?	Yes	This problem will disappear by printing approximate 10 pages. If the same problem occurs, replace the toner cartridge.
2	Dirt on the exposure drum	Are the black spots at 94.2 mm (exposure drum circumference) intervals?	Yes	Clean the exposure drum with the drum cleaning kit.
3	Scratch and Dirt on the exposure drum	Does not the black spots disappear by cleaning (procedure 2)?	No	Replace the drum unit.
4	Drum unit connection failure	Are the electrodes on the drum unit and machine body dirty?	Yes	Clean both electrodes (Refer to Fig. 3-2, Fig. 3-3.)
5	Scratch and Dirt on the heat roller	Are the black spots at 78.5 mm (heat roller circumference) intervals?	Yes	Replace the fuser unit.
6	HVPS PCB failure	Is the problem solved after replacing the HVPS PCB ASSY?	Yes	Replace the HVPS PCB ASSY.
7	Main PCB failure	Is the problem solved after replacing the main PCB ASSY?	Yes	Replace the main PCB ASSY.

■ Black band

<User Check>

- Clean the inside of the machine and the corona wire in the drum unit. If the same problem occurs after cleaning, replace the drum unit with a new one.
- The paper tray ground terminal provided in the machine body may be dirty. Clean the contact with a dry cloth.

■ Downward fogging of solid color

<User Check>

- Toner may be empty. Replace the toner cartridge with a new one.

Step	Cause	Check	Result	Remedy
1	Toner sensor failur	Is the toner sensor performed normally by following the procedure in "Factory Inspection Mode" in 1.3 Service Mode in Chapter 7.	No	Replace the toner sensor PCB unit ASSY and the toner LED PCB ASSY.
2	HVPS PCB failure	Is the problem solved after replacing the HVPS PCB ASSY?	Yes	Replace the HVPS PCB ASSY.
3	Main PCB failure	Is the problem solved after replacing the main PCB ASSY?	Yes	Replace the main PCB ASSY.

■ Horizontal lines

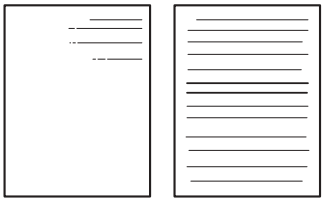

<User Check>

- The paper tray ground terminal provided in the machine body may be dirty. Clean the contact with a dry cloth.

Step	Cause	Check	Result	Remedy
1	Dirt on charged electrode	Are the electrodes on the drum unit and machine body dirty?	Yes	Clean both electrodes. (Refer to Fig. 3-2, Fig. 3-3.)
2	Paper tray ground terminal provided in machine body	Is the paper tray ground terminal bent, which is provided in the machine body?	Yes	Correct bending of paper tray ground terminal.
3	Laser unit failure	Is the problem solved after replacing the laser unit?	Yes	Replace the laser unit.

■ Ghost

<User Check>

- Check the machine's environment, conditions such as high or low humidity may cause this situation to occur.
- Check that the appropriate media type or size is selected in the printer driver.
- Replace the drum unit with a new one.

Step	Cause	Check	Result	Remedy
1	HVPS PCB failure	Is the problem solved after replacing the HVPS PCB ASSY?	Yes	Replace the HVPS PCB ASSY.
2	Main PCB failure	Is the problem solved after replacing the main PCB ASSY?	Yes	Replace the main PCB ASSY.

■ Fogging

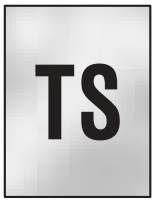

<User Check>

- Replace the toner cartridge with a new one.
- Replace the drum unit with a new one.
- Do not use acid paper.
- Check if there is dust or paper powder in the machine.

Step	Cause	Check	Result	Remedy
1	Toner sensor failure (Machine body)	Is the toner sensor performed normally by following the procedure in "Factory Inspection Mode" in 1.3 Service Mode in Chapter 7.	No	Replace the toner sensor PCB unit ASSY and the toner LED PCB ASSY.
2	HVPS PCB failure	Is the problem solved after replacing the HVPS PCB ASSY?	Yes	Replace the HVPS PCB ASSY.
3	Main PCB failure	Is the problem solved after replacing the main PCB ASSY?	Yes	Replace the main PCB ASSY.

CAUTION :

- This problem often occurs when the drum unit or toner cartridge is nearly at the end of life.

■ Hollow print by condensation

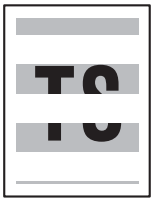

<User Check>

- Turn the power on and leave the machine for a few minutes.

Step	Cause	Check	Result	Remedy
1	Condensation of drum unit by high humidity environment	Is the problem solved after setting the drum condensation countermeasure mode to ON?	Yes	Drum condensation countermeasure mode is set to ON. (Refer to "3.2 Drum condensation countermeasure mode" in Chapter 7.)

Confidential

5. SOFTWARE SETTING PROBLEMS

The machine may not print the data correctly if there are incorrect software settings.

<User Check>

- Check that the USB cable and the network cable is not damaged or broken.
- Check that the correct machine is selected if you have an interface switching device.
- Check the descriptions on the software setting in the user's guide.
- Try resetting the factory settings. (Refer to Users guide.)

Step	Cause	Check	Result	Remedy
1	Failure inside the machine	Does the machine print "Printer Settings" ? (Refer to "Printing for Maintenance" in 1.3 Service Mode in Chapter 7.)	No	Identify the error type, and then refer to the specified section of this chapter.
2	Machine connection	For Macintosh, has the product ID been verified?	No	Verify the product ID.Product ID: HL-5340D/5340DL: 0039* HL-5350DN: 003A* HL-5350DNLT: 003A* HL-5370DW: 003B* HL-5370DWT: 003B* HL-5380DN: 003C * Hexadecimal
3	Main PCB failure	Is the problem solved after replacing the main PCB ASSY?	Yes	Replace the main PCB ASSY.

6. NETWORK PROBLEMS

<User Check>

- Check the descriptions in the network user's guide.
- Try resetting the factory settings.

Step	Cause	Check	Result	Remedy
1	Wireless LAN PCB failure (HL-5370DW/ 5370DWT)	Is the problem solved after replacing the wireless LAN PCB ASSY?	Yes	Replace the wireless LAN PCB ASSY.
2	Main PCB failure	Is the problem solved after replacing the main PCB ASSY?	Yes	Replace the main PCB ASSY.

CHAPTER 4

PERIODICAL MAINTENANCE

CHAPTER 4 PERIODICAL MAINTENANCE

CONTENTS

1. PERIODICAL MAINTENANCE PARTS 4-1

1.1 Periodical Maintenance Parts 4-2

1.2 Procedures to Replace Periodical Maintenance Parts 4-3

1.2.1 Fuser unit and laser unit 4-3

1.2.2 Paper feeding kit for tray 1, 2, 3 4-24

1.2.3 Paper feeding kit for MP tray 4-30

1. PERIODICAL MAINTENANCE PARTS

To avoid creating secondary problems by mishandling, follow the warnings below during maintenance work.

WARNING

- Always turn off the power switch and unplug the power cord from the power outlet before accessing any parts inside the machine.
- When opening the front cover or back cover to access any parts inside the machine, never touch the shaded parts shown in the following figures.
- DO NOT use flammable substances such as alcohol, benzine, thinner or any type of spray to clean the inside or outside of the machine. Doing this may cause a fire or electrical shock.

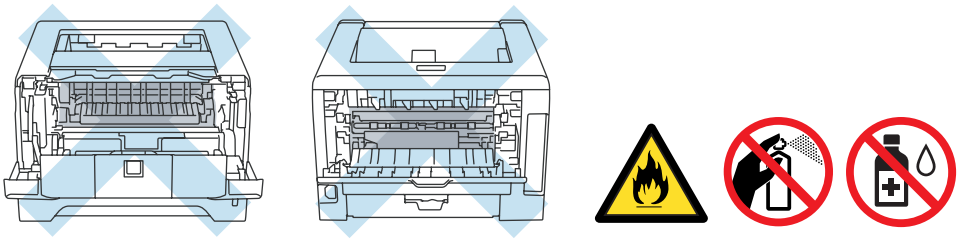

1.1 Periodical Maintenance Parts

Periodical maintenance parts are the parts to be replaced periodically to maintain product quality. These parts would affect the product quality greatly if they lost their function even if they do not appear to be damaged or there is no change in their appearance.

The Periodical maintenance parts listed below should be replaced at the service center referring to the service life.

Parts Name	LCD Message (HL-5380DN)	Qty	Approximate Life *1 (number of prints)	Replacement Procedure
Fuser Unit	REPLACE FUSER	1	100,000 pages	See subscription 1.2.1, Chapter 4
Laser Unit	REPLACE LASER	1	100,000 pages	
PF kit for Tray 1 *3	REPLACE PF KIT1	1	Except for India: 100,000 pages	See subscription 1.2.2, Chapter 4
			India: 80,000 pages	
PF kit for Tray 2 *3	REPLACE PF KIT2	1	Except for India: 100,000 pages	
			India: 80,000 pages	
PF kit for Tray 3 *3	REPLACE PF KIT3	1	Except for India: 100,000 pages	
			India: 80,000 pages	
MP PF tray *2	REPLACE PF KIT MP	1	Except for China/ India: 50,000 pages	See subscription 1.2.3, Chapter 4
			China: 25,000 pages	
			India: 12,000 pages	

To reset the count of each Periodical maintenance parts, refer to "3. IF YOU REPLACE THE PERIODICAL MAINTENANCE PARTS", Chapter 6

*1 At 5% print coverage (A4 or Letter size). The actual number of printed pages will vary depending on the print jobs and paper you use. The number is calculated when simplex printed the normal business document (ISO/IEC19752) on the A4 size.

*2 Paper feeding kit MP means the MP roller holder ASSY and the separation pad ASSY MP.

*3 Paper feeding kit for Tray 1, Tray 2 and Tray 3 means the roller holder ASSY, the separation pad ASSY and the separation pad spring. Tray 1, Tray 2 and Tray 3 are the same kit.

Note :

- Always turn off the power switch of the printer and unplug the power cord from the power outlet before replacing the Periodical maintenance parts.
- If the Fuser Unit is replaced after errors related to the Fuser Unit occur, it is necessary to leave the printer power ON for ten minutes after part replacement. This will make the printer to be released from errors.
- After disconnecting flat cables, check that each cable is not damaged at its end or short-circuited.
- When connecting flat cables, do not insert them at an angle. After insertion, check that the cables are not at an angle.
- The counter value of PF kit for tray 2 and PF kit for tray 3 does not change, even if the Optional lower tray 2 and Optional lower tray 3 are replaced.

1.2 Procedures to Replace Periodical Maintenance Parts

1.2.1 Fuser unit and laser unit

<Uninstalling Procedure>

Check that the following before entering the procedures.

- Make sure that the AC cord is disconnected from the printer.
- Make sure that the Drum/toner ASSY is removed.
- Make sure that the DX feed ASSY or DX blank cover is removed.
- Make sure that the Paper is removed from the Paper tray.

(1) Open the Back cover.

(2) Remove the Arms of the Back cover from the Pins.

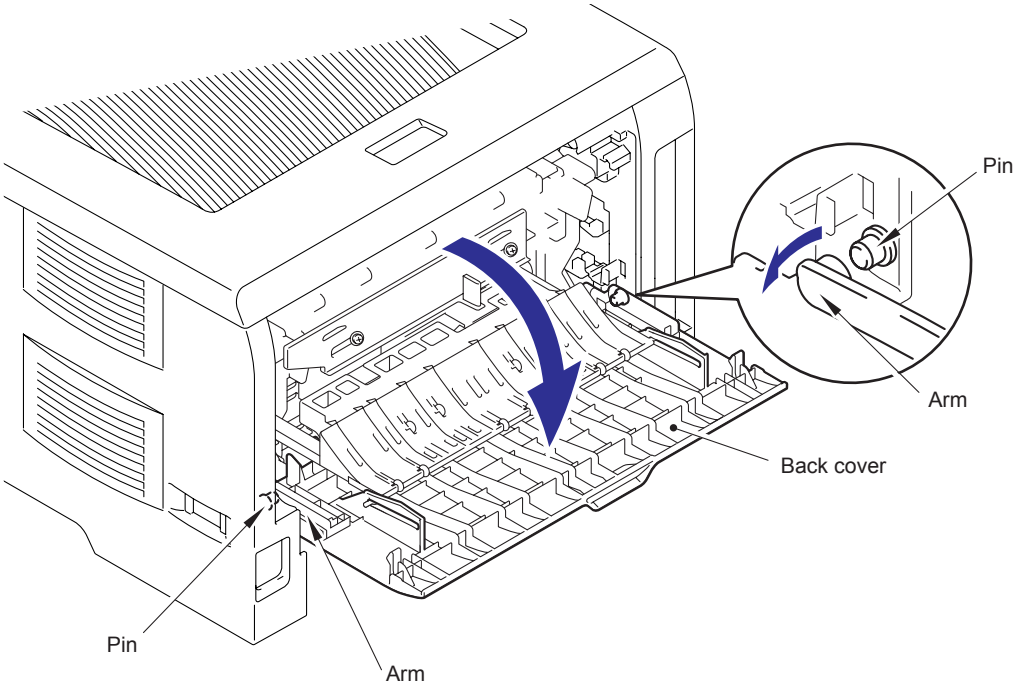

Fig. 4-1

Confidential

(3) Remove the Pins of the Outer chute ASSY from the Back cover.

(4) Remove the Back cover.

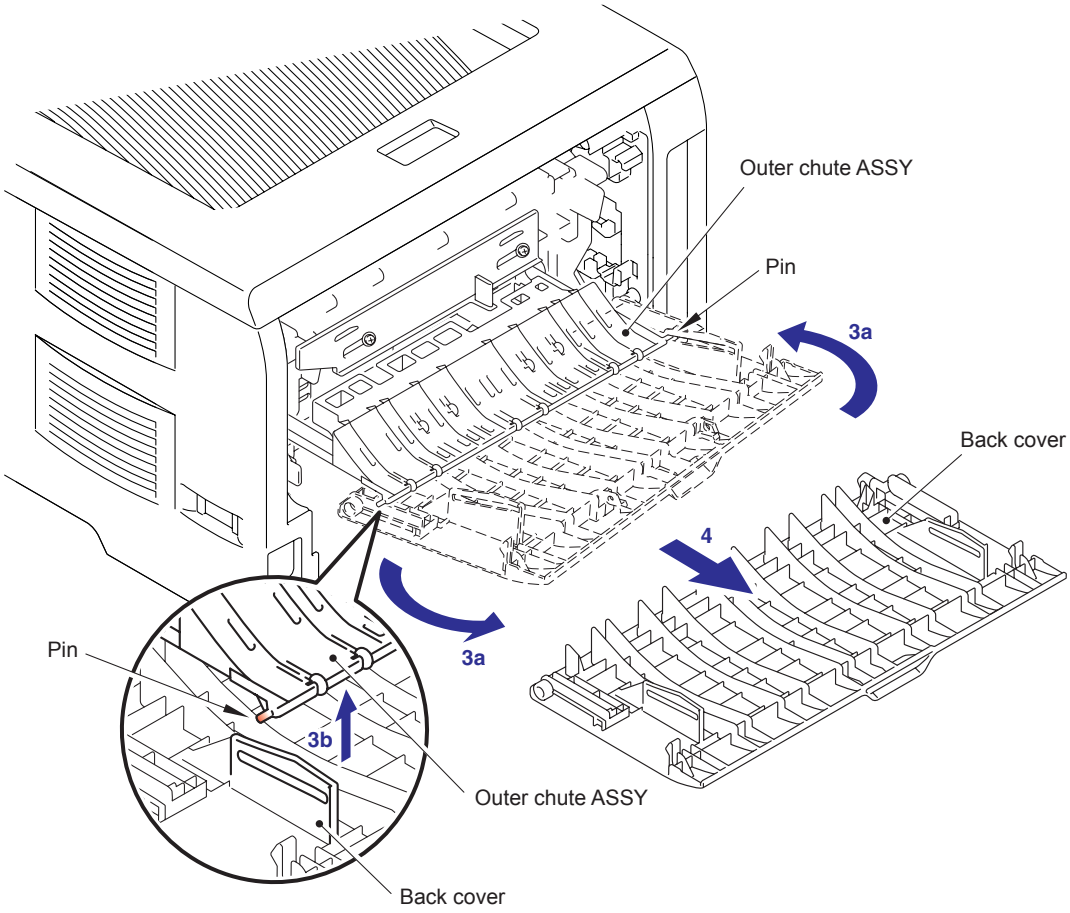

Fig. 4-2

(5) Hold the Knobs on the Rear chute ASSY and pull down this to your side.

(6) Remove the Arms of the Rear chute ASSY from the Pins.

(7) Remove the Rear chute ASSY.

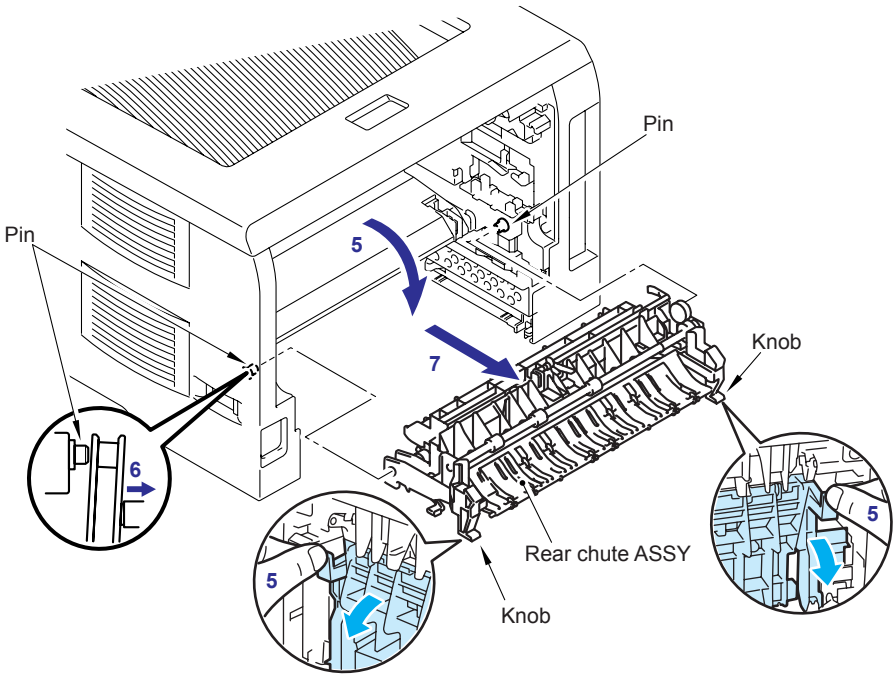

Fig. 4-3

(8) Remove the pan B M4x20 Taptite screw. Release the Hooks in the order of 8a, 8b and 8c. Remove the FU harness cover 1.

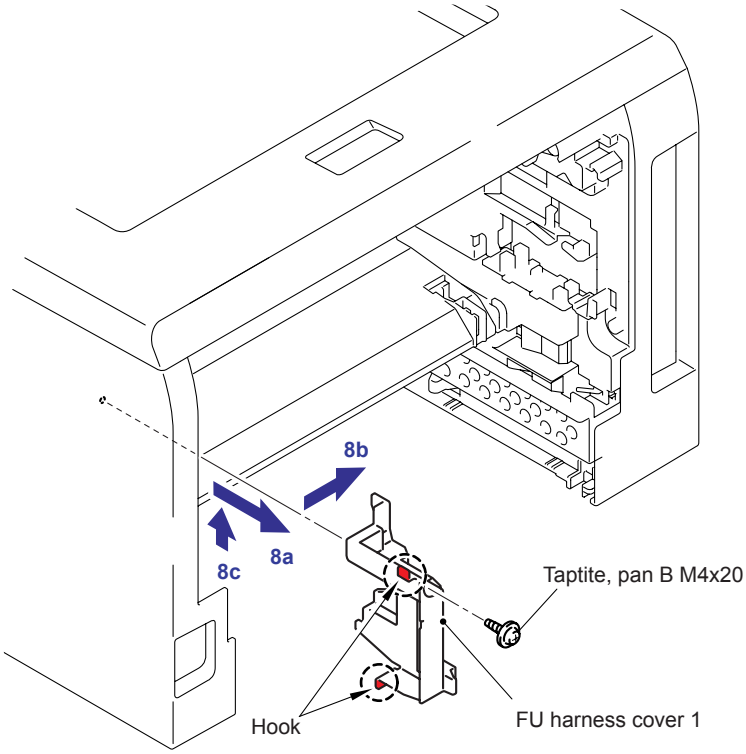

Fig. 4-4

Confidential

(9) Disconnect the connector of the Heater terminal while pressing the Hook of the connector of the Fuser unit.

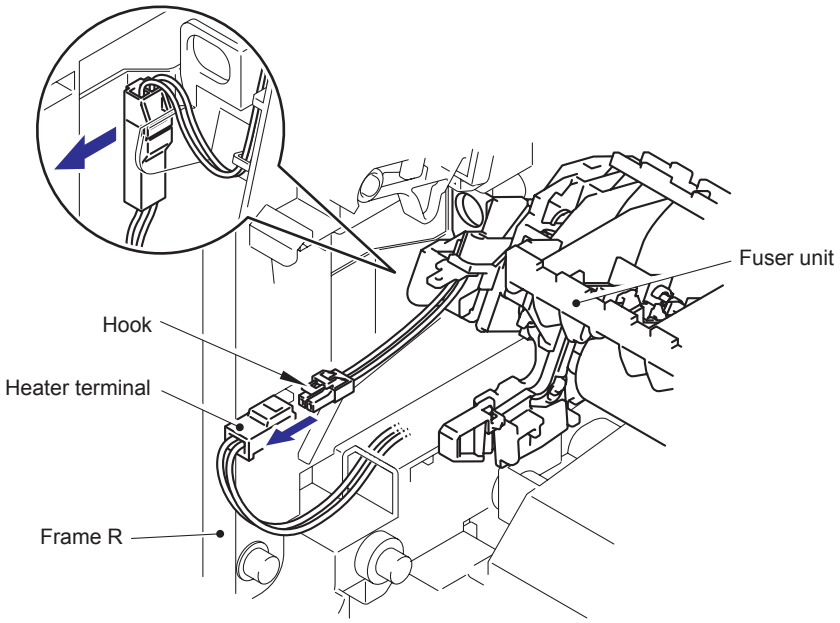

Fig. 4-5

(10) Pull the FU harness cover 2 to the direction of 10a while pressing the Hook and pull out the FU harness cover 2 from the back of the printer.

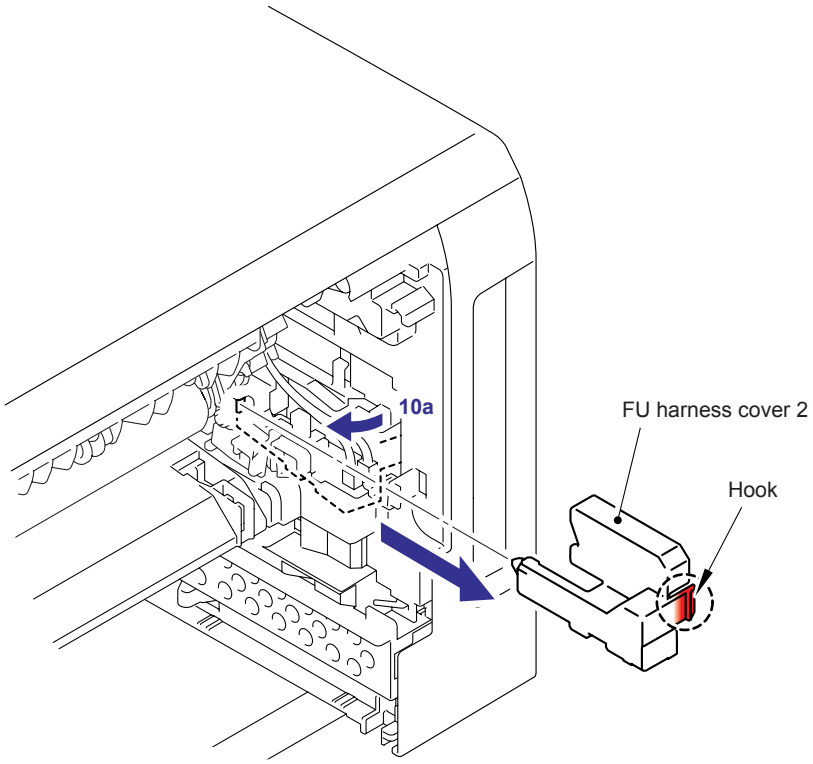

Fig. 4-6

Confidential

(11) Disconnect the connectors of the Thermistor ASSY M and Thermistor ASSY S from the Relay rear PCB ASSY, and remove the harnesses of these thermistors.

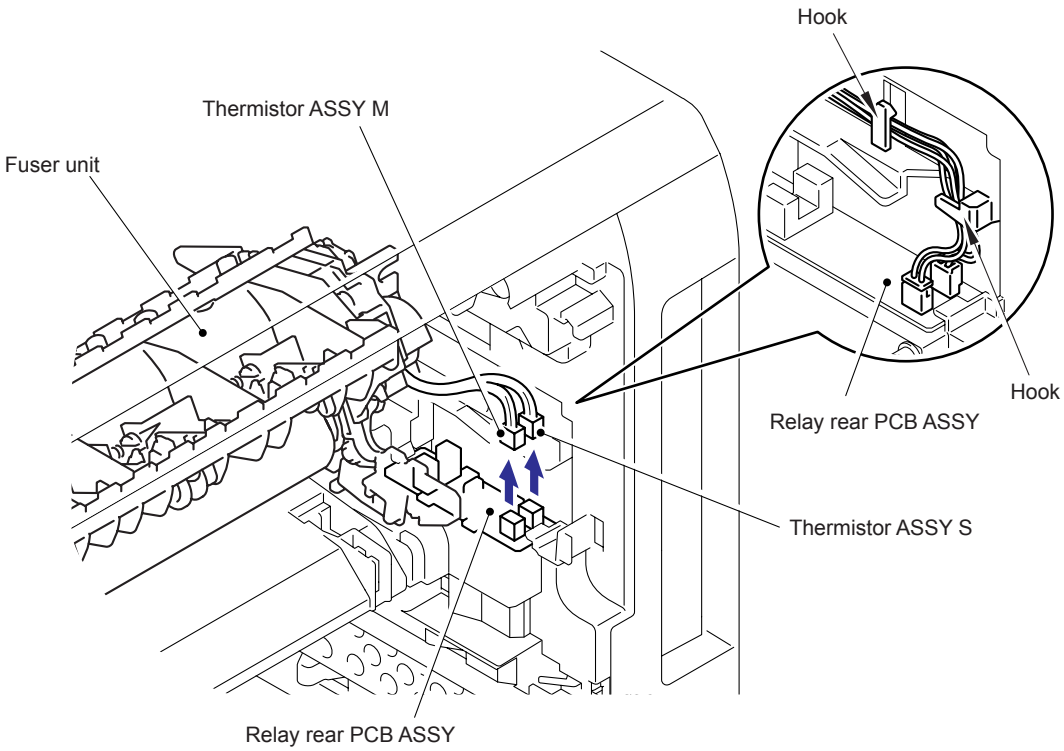

Fig. 4-7

(12) Remove the pan B M4x20 Taptite screw to remove the Fuser unit.

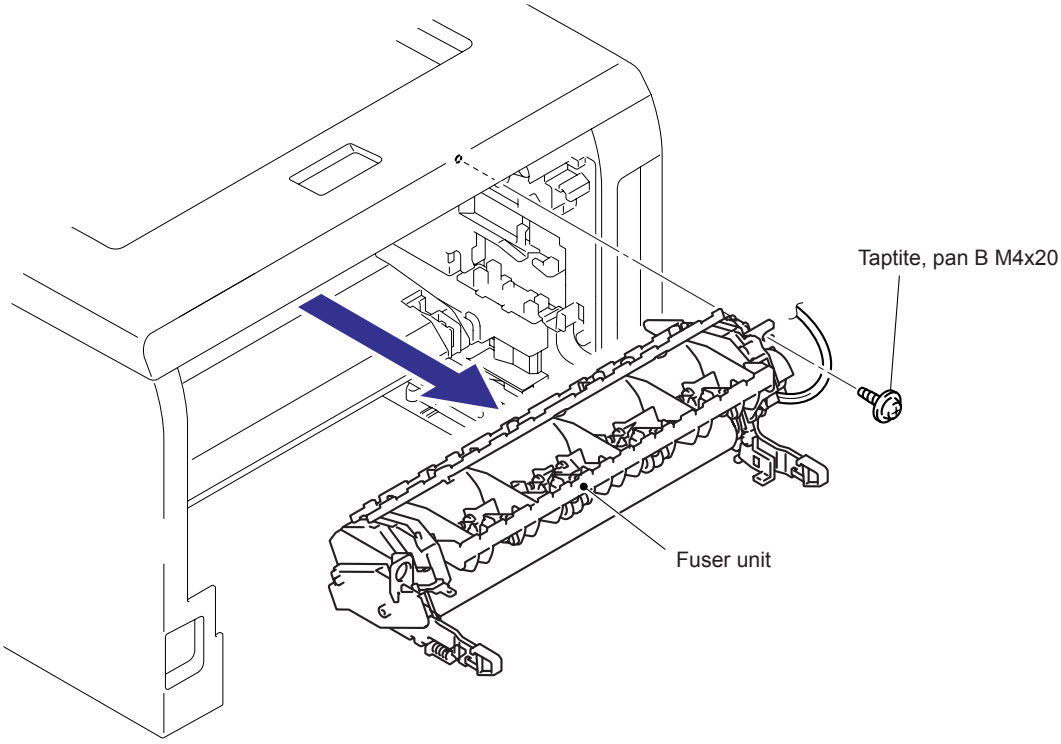

Fig. 4-8

Confidential

(13) Open the Front cover, remove the two bind B M4x12 Taptite screws, and then remove the Side cover L by releasing the Hooks in the order of 13a to 13d.

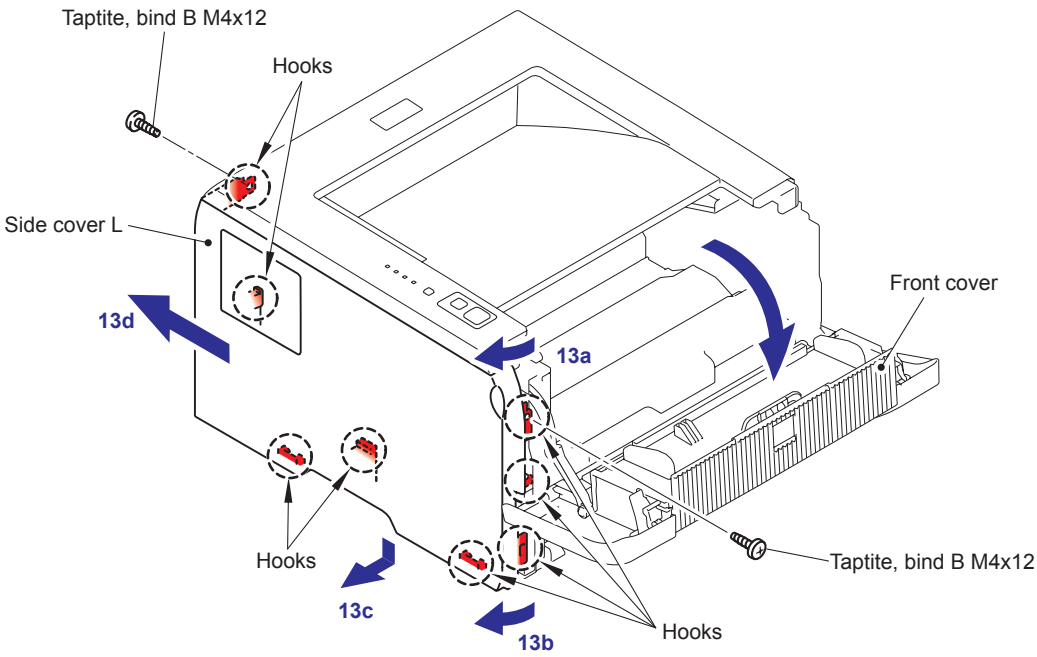

Fig. 4-9

(14) Remove the four cup S M3x6 SR Taptite screws to remove the Shield cover and the FG harness.

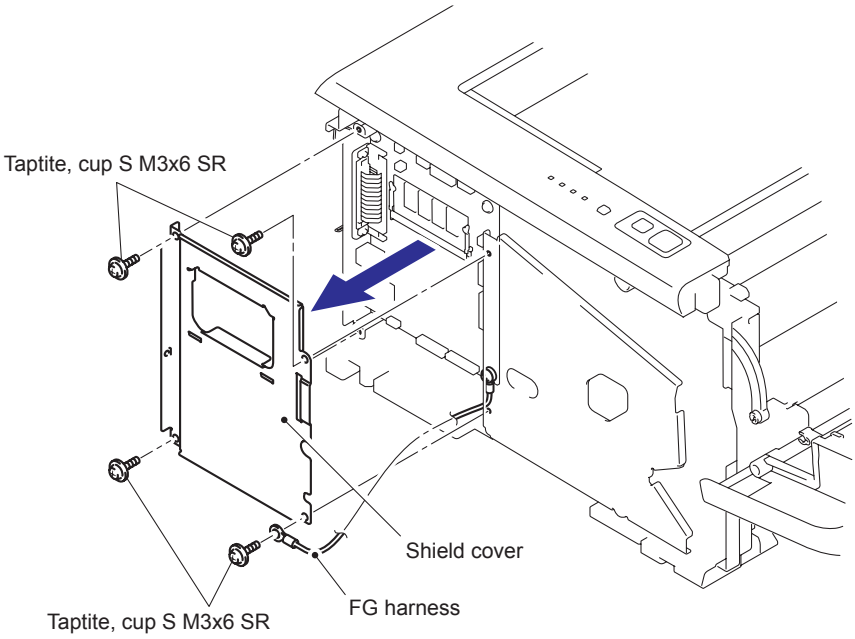

Fig. 4-10

Confidential

(15) Remove the two bind B M4x12 Taptite screws and release the Hooks by following direction from 15a to 15d, then remove the Side cover R.

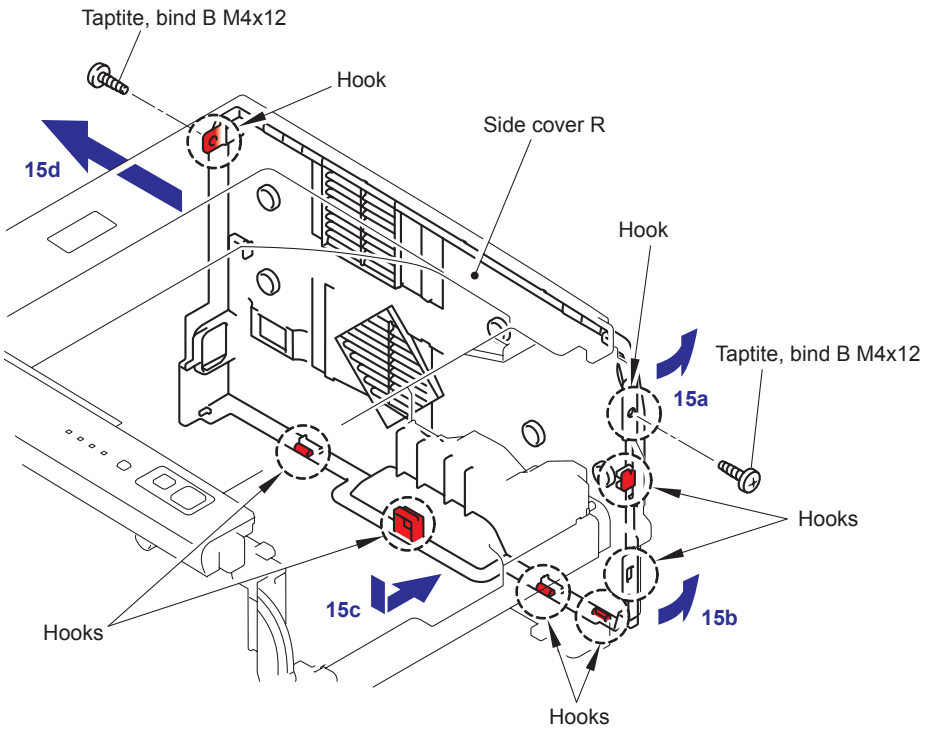

Fig. 4-11

(16) Disconnect the Connector of the Panel PCB.

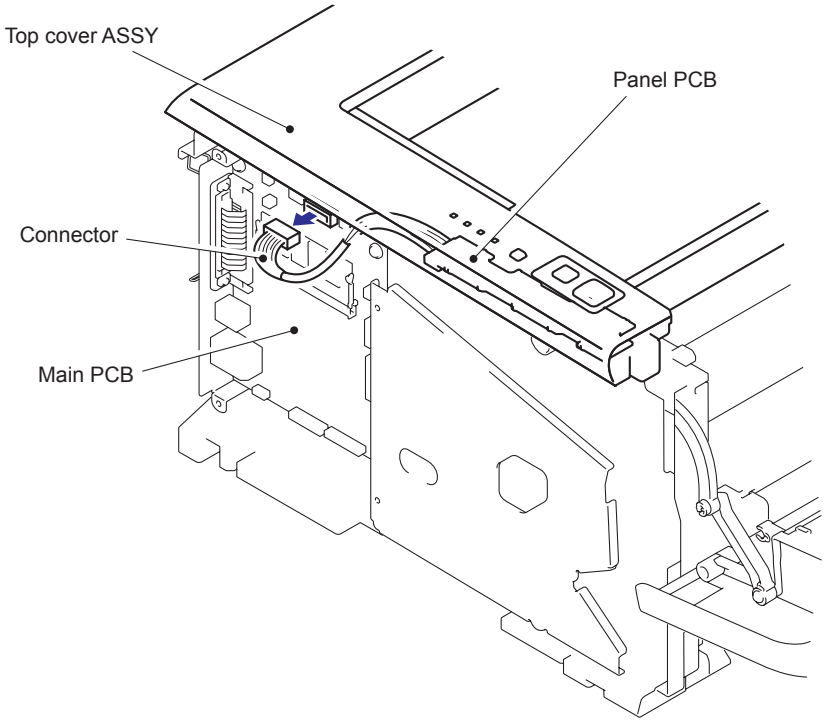

Fig. 4-12

Confidential

(17) Remove the two bind B M4x12 Taptite screws from Top cover ASSY.

(18) Release all Hooks of the Top cover ASSY and lift up the front side of the Top cover ASSY.

(19) Remove the Top cover ASSY.

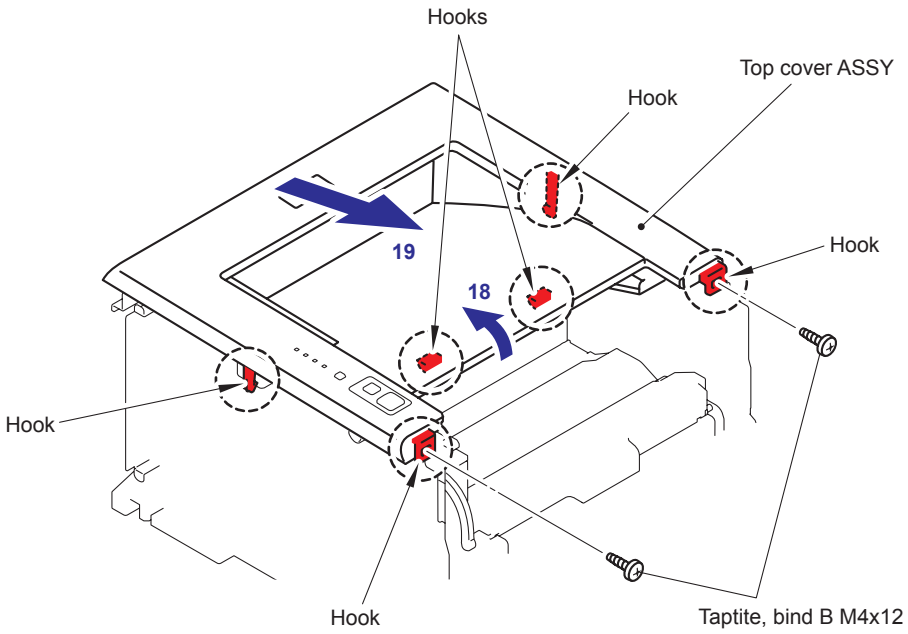

Fig. 4-13

(20) Disconnect the harness of the wireless PCB ASSY.

(21) Slide the Sub duct to the direction of 21b while pressing the Hook to the direction of 21a and remove the Sub duct from the Air duct.

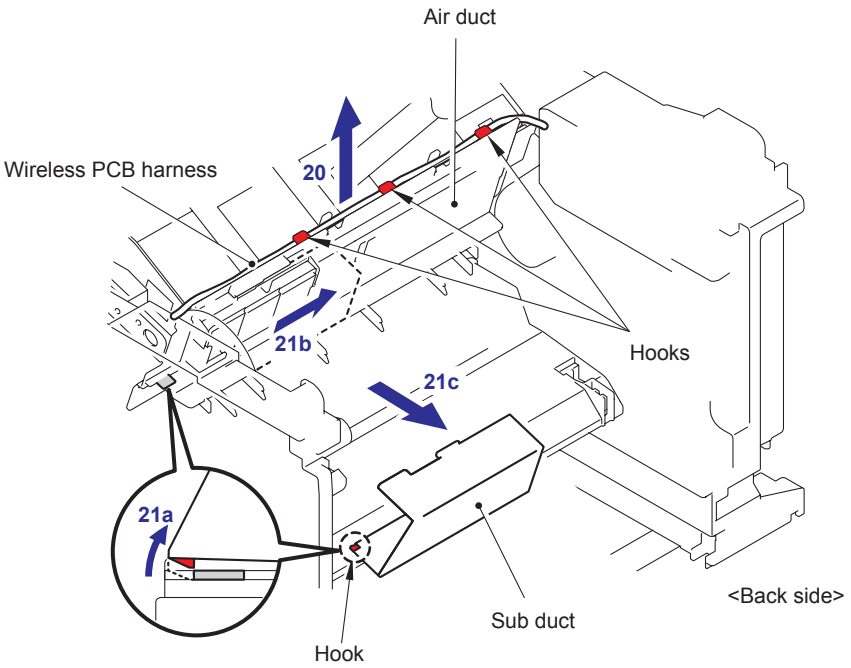

Fig. 4-14

Confidential

(22) Remove the Filter from the Air duct.

Note :

- The filter is dirt. Be careful when disassembling or assembling it.

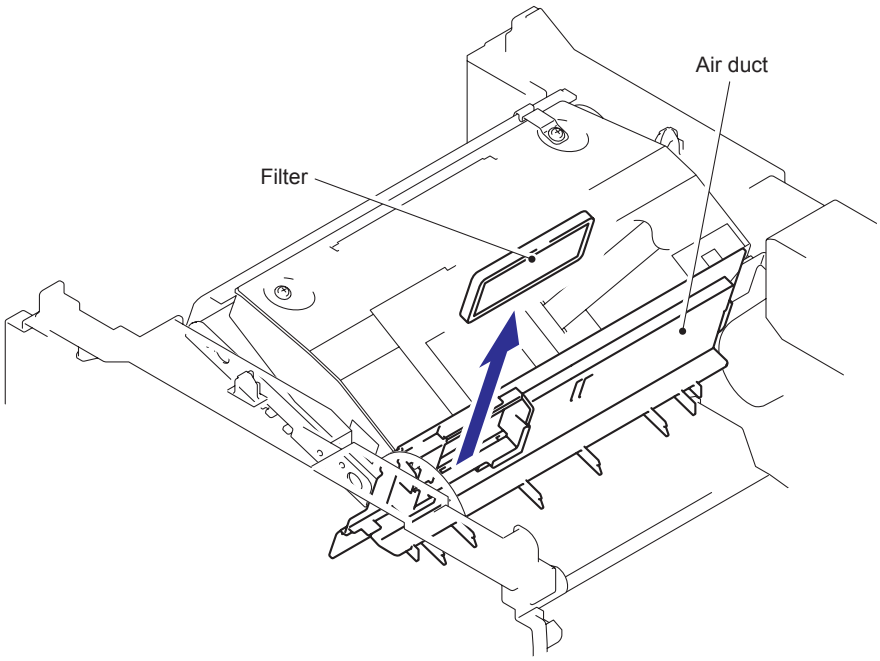

Fig. 4-15

(23) Remove the Hook of the Air duct from the frame. Slide the Air duct to the direction of 22b and remove the Air duct.

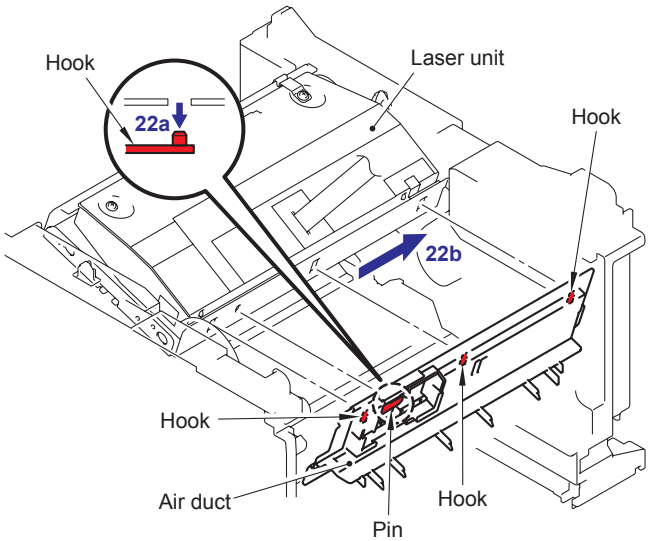

Fig. 4-16

Confidential

(24) Remove the two Flat cable from the Main PCB.

Note :

- After disconnecting flat cable(s), check that each cable is not damaged at its end or short-circuited.

(25) Remove the six cup S M3x6 Taptite screws.

(26) Remove the Protective film from the Flat cable.

(27) Pull out the two Flat cables from the Core.

(28) Remove the Laser unit.

Note :

- Be careful not to lose the Protective film attached on the flat cable.
- Do not touch the Laser scanner window directly.

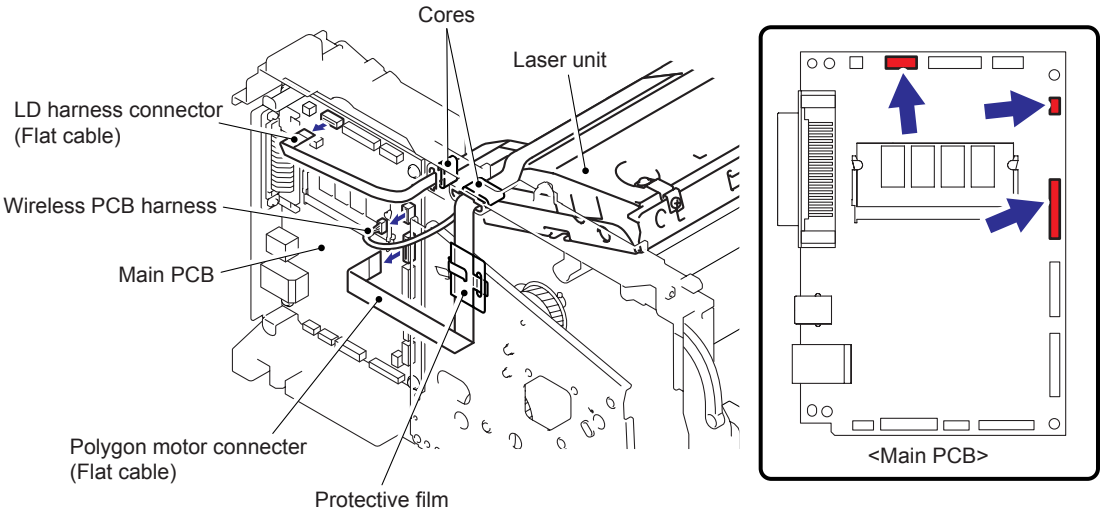

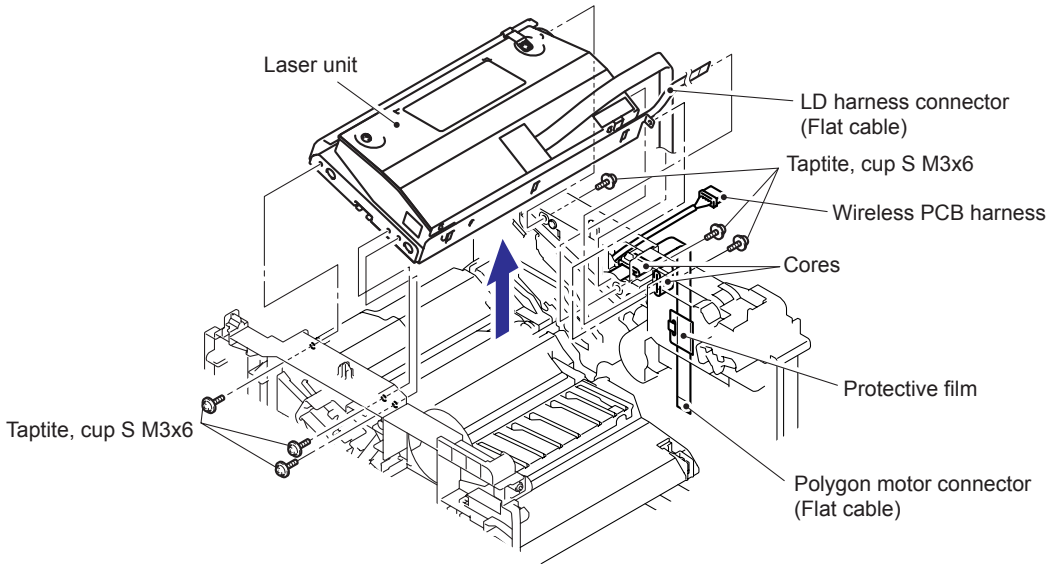

Fig. 4-17

< Installing Procedure >

(1) Secure the Laser unit with the six cup S M3x6 Taptite screws.

(2) Put the Flat cable (LD harness connector) through the Core.

(3) Put the Flat cable (Polygon motor connector) through the Core and Protective film. (Refer to "6. HARNESS ROUTING" in Chapter 5.)

(4) Connect the two Flat cables to the Main PCB.

Note :

- When connecting flat cable(s), do not insert them at an angle. After insertion, check that the cables are not at an angle.

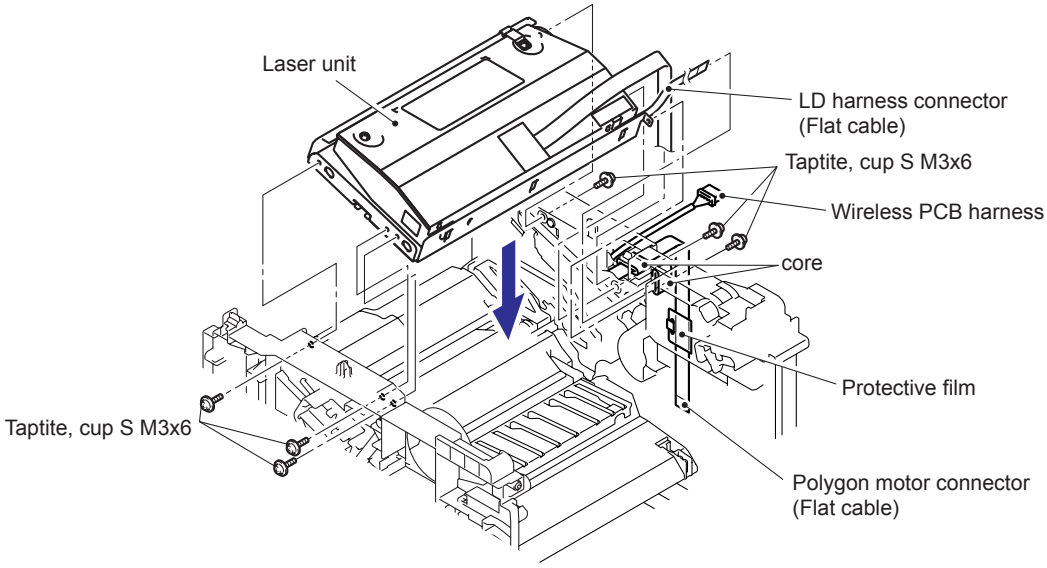

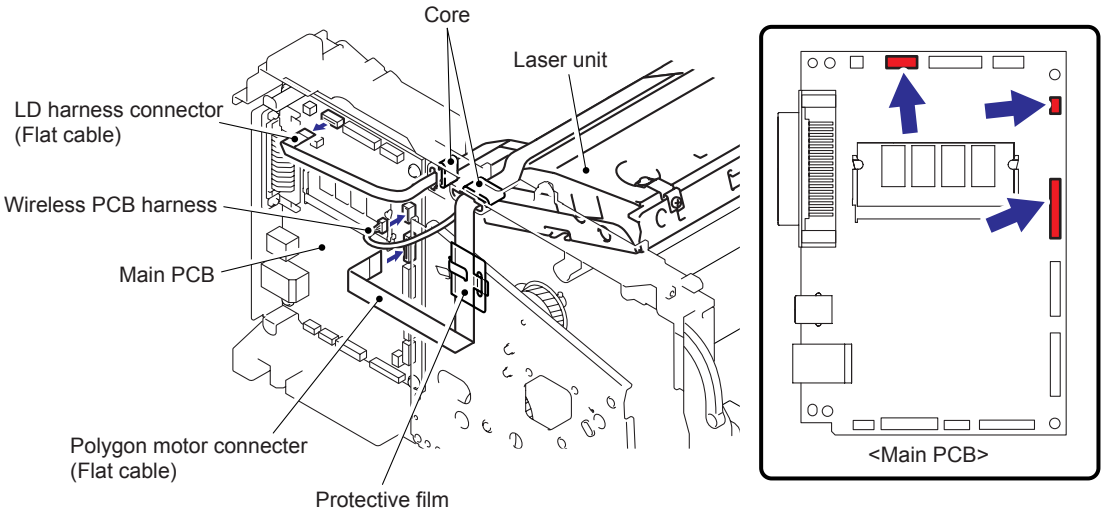

Fig. 4-18

Confidential

(5) Install the Air duct into the Laser unit.

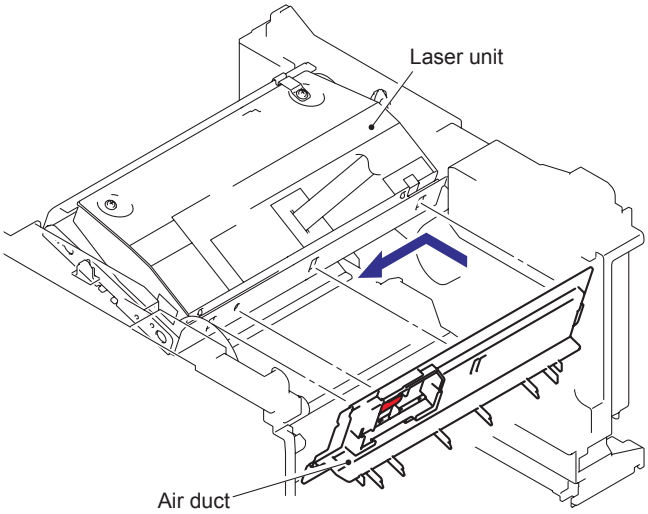

Fig. 4-19

(6) Install the Filter into the Air duct.

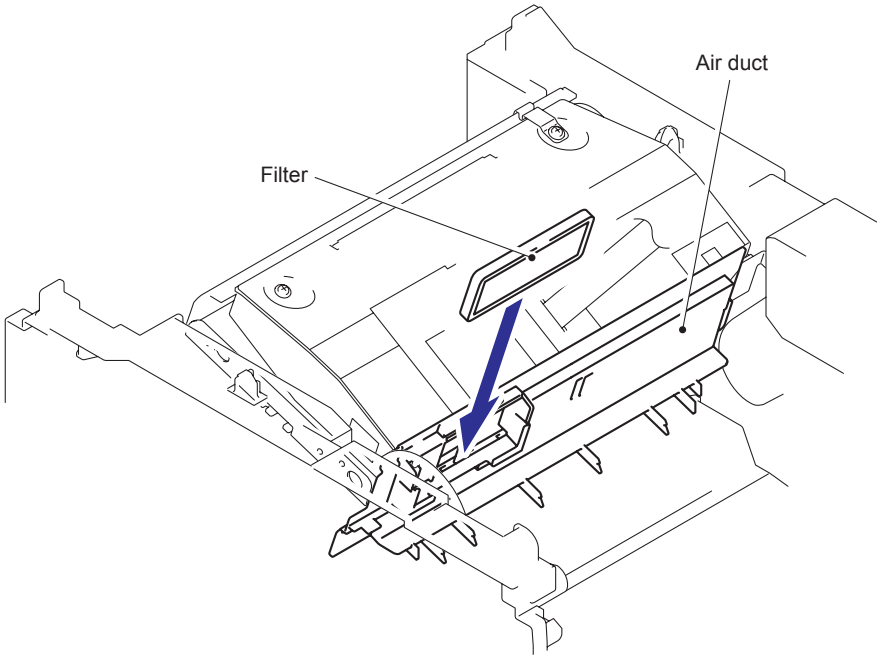

Fig. 4-20

Confidential

(7) Install the Sub duct into the Air duct.

(8) Connect the harness of the wireless PCB ASSY.

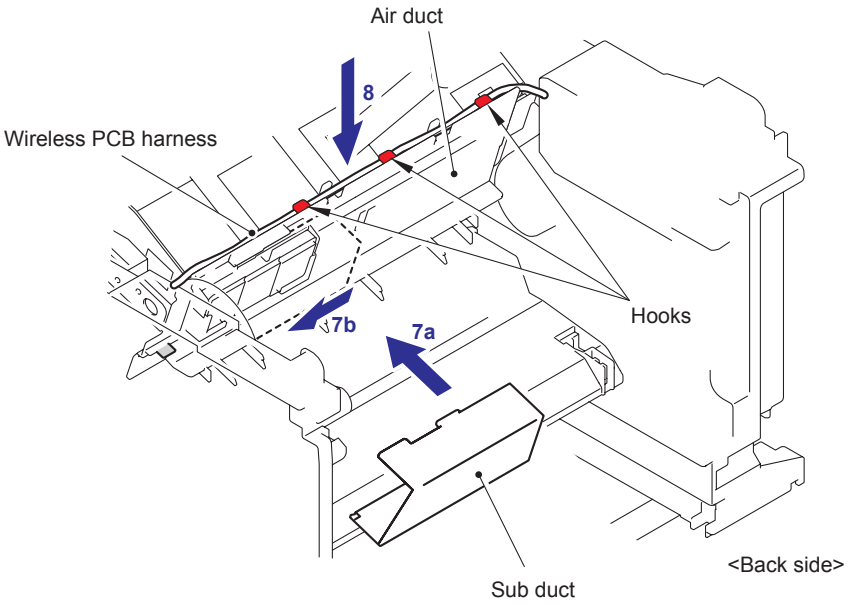

Fig. 4-21

(9) Secure the Top cover ASSY with the two bind B M4x12 Taptite screws.

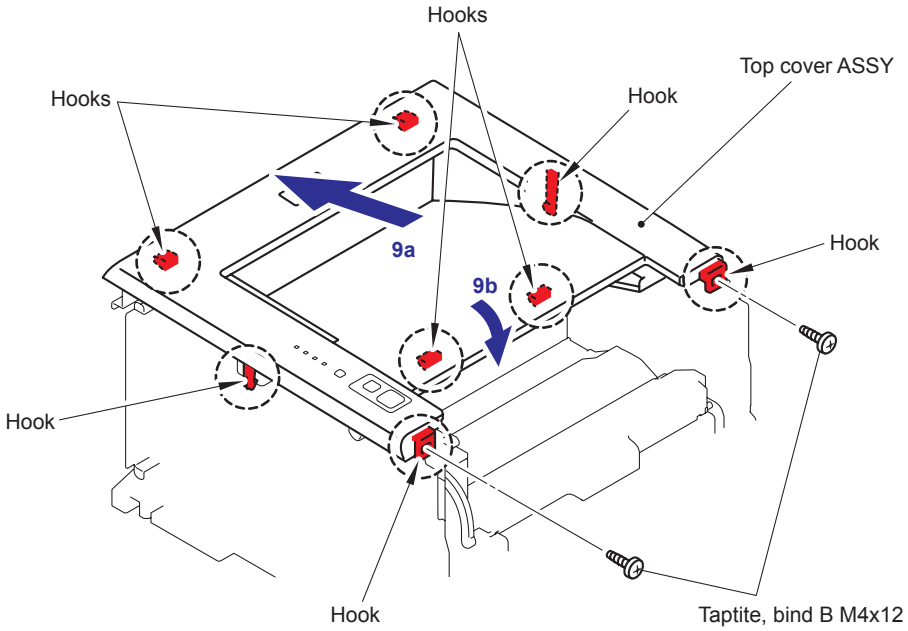

Fig. 4-22

Confidential

(10) Connect the Connector of the Panel PCB.

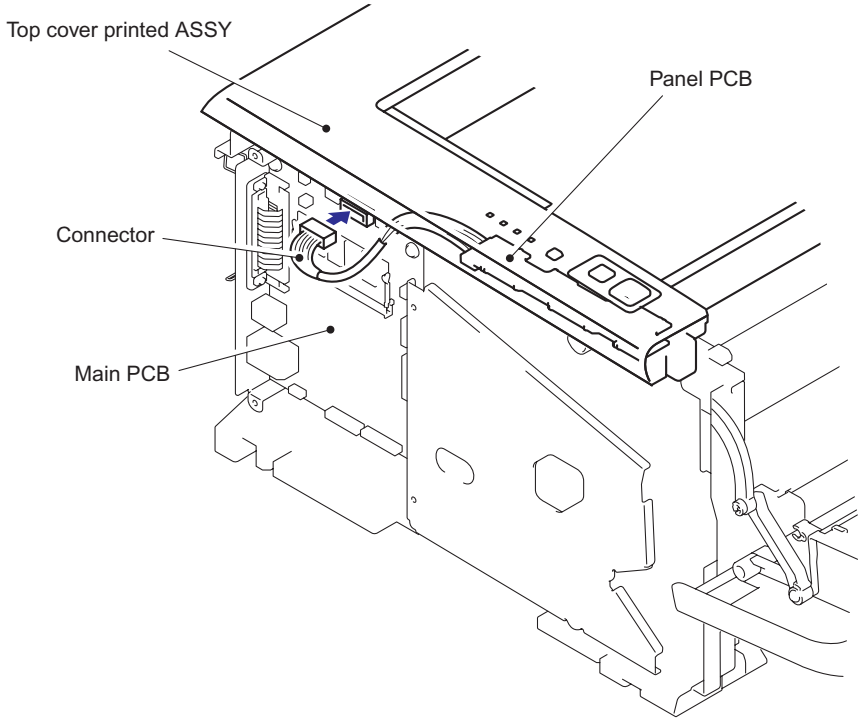

Fig. 4-23

(11) Catch the all Hooks and secure the Side cover R with the two bind B M4x12 Taptite screws.

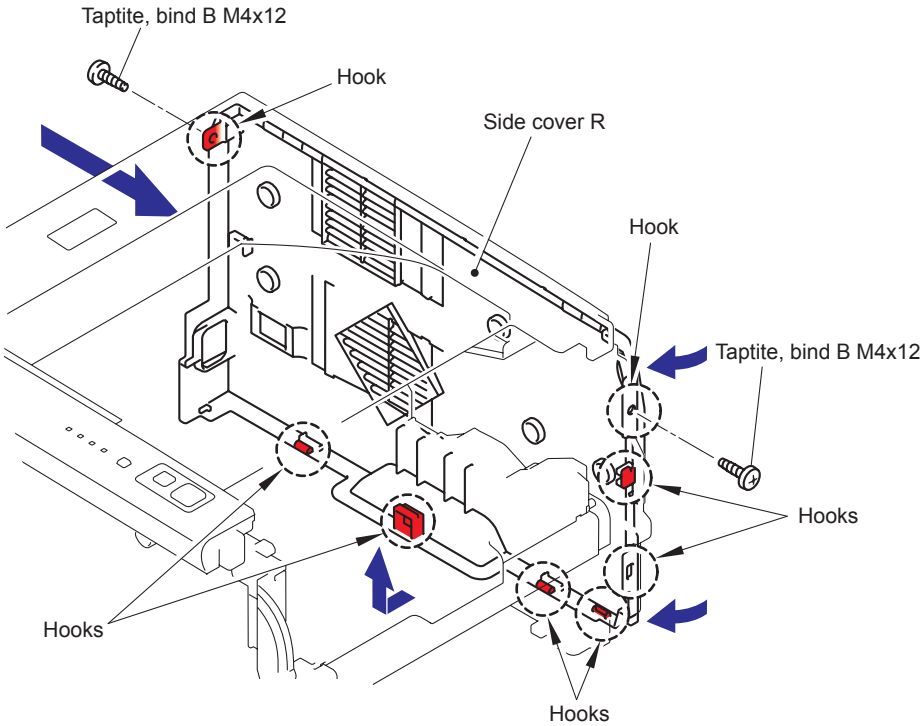

Fig. 4-24

Confidential

(12) Secure the Shield cover and FG harness with the four cup S M3x6 SR Taptite screws.

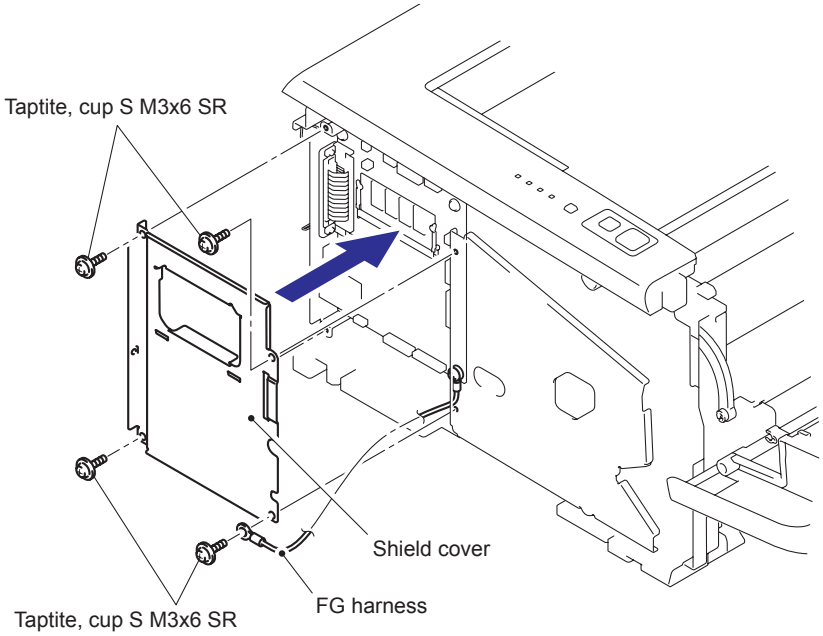

Fig. 4-25

(13) Catch the all Hooks and secure the Side cover L with the two bind B M4x12 Taptite screws.

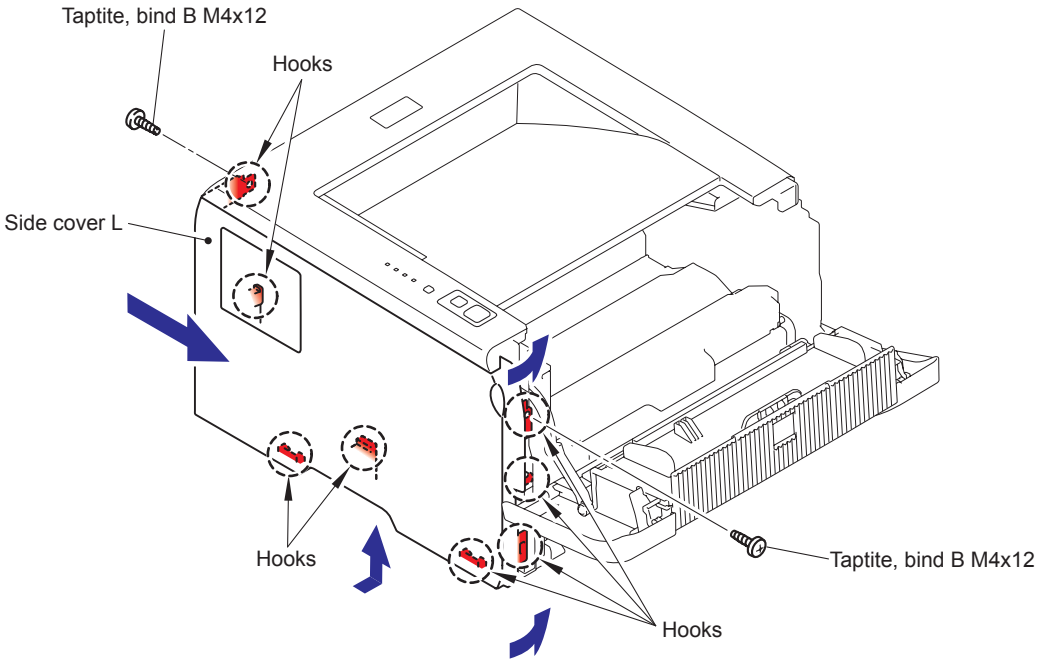

Fig. 4-26

Confidential

CAUTION

- DO NOT subject the fuser unit to strong physical shocks or vibrations.
- DO NOT touch the rollers and the electrodes to prevent damage to the fuser unit In the following figures.

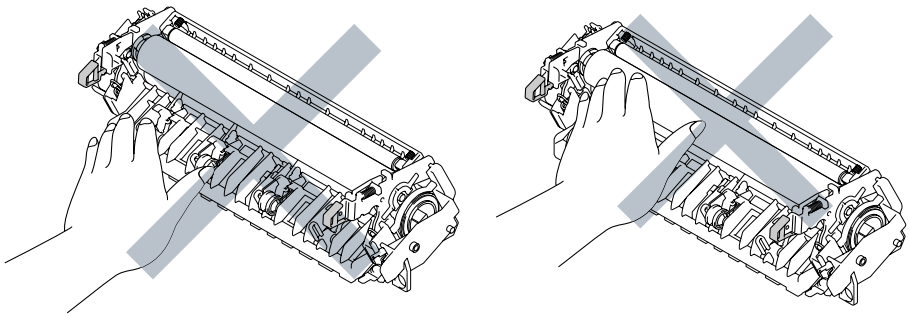

- To prevent the deformation of the pressure roller, the fuser unit spare part is shipped with its pressure roller at low nip pressure. Before installing the fuser unit, turn back the levers to the normal position by following instructions below.

(1) Put the fuser unit on a flat, horizontal surface. Pull up each of the black tab (a) on the right side and left side.

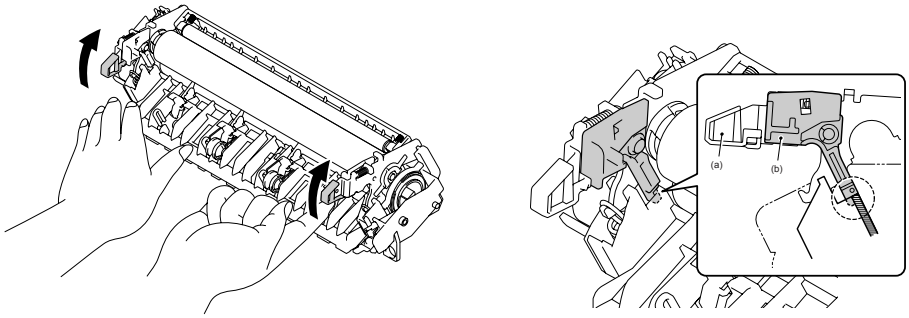

(2) Make sure that the black lever (b) is in the position in the illustration below.

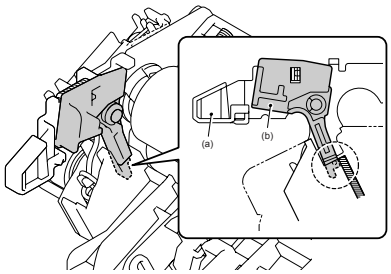

Confidential

(14) Secure the Fuser unit with the pan B M4x20 Taptite screw.

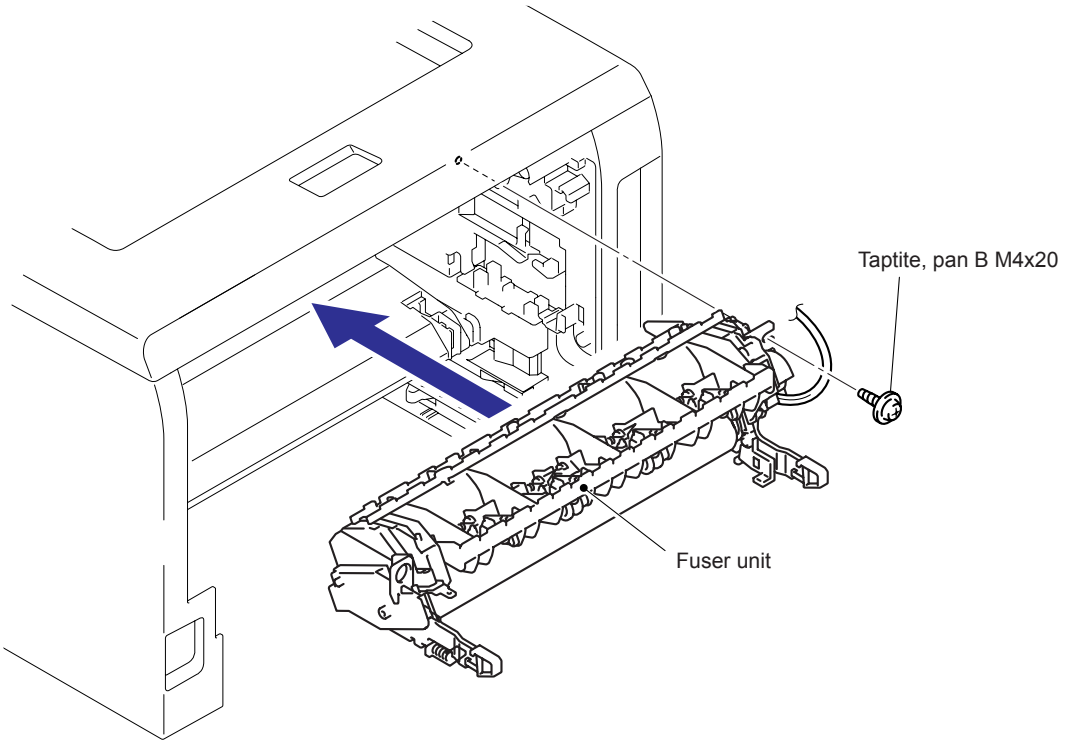

Fig. 4-27

Confidential

(15) Connect the connectors of the Thermistor ASSY M and Thermistor ASSY S onto the Relay rear PCB ASSY.

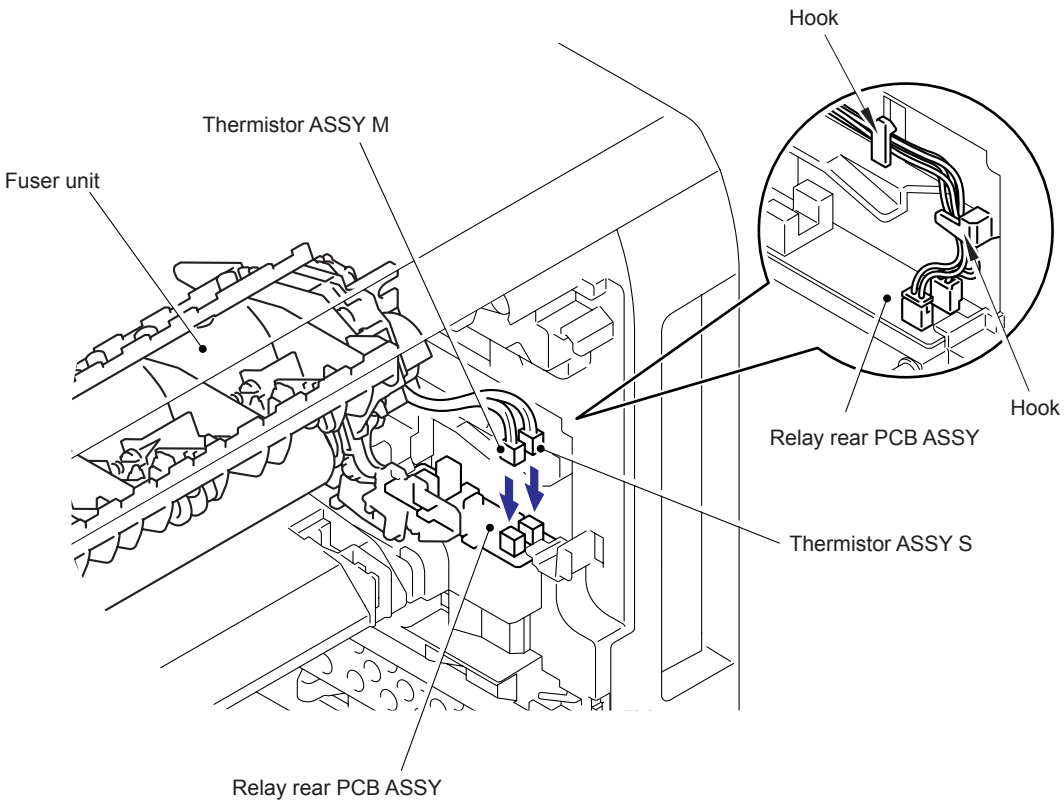

Fig. 4-28

(16) Install the FU harness cover 2.

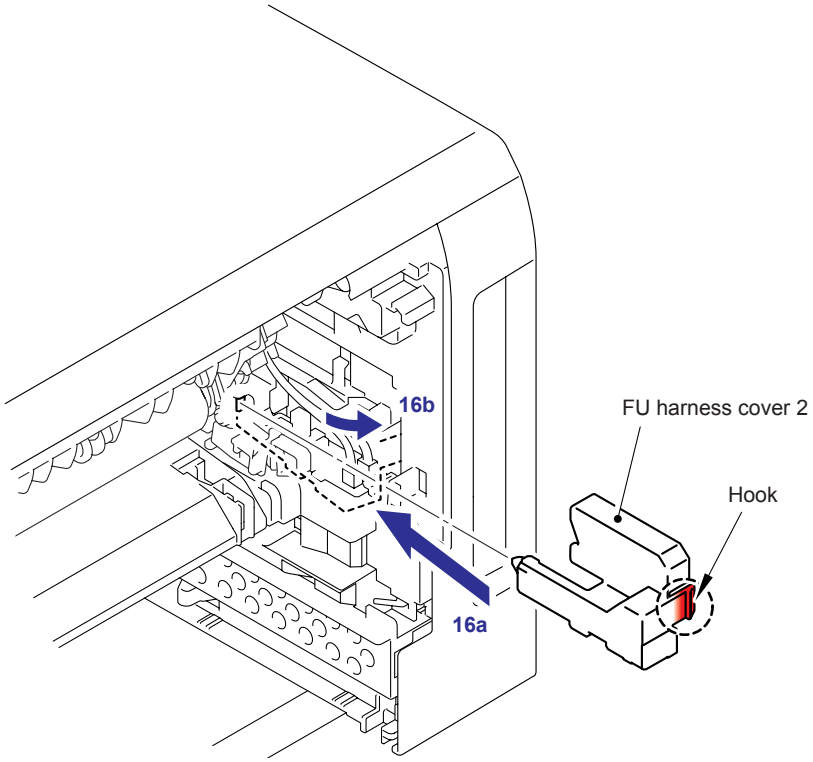

Fig. 4-29

Confidential

(17) Install the connector of the Heater terminal to the connector of the Fuser unit.

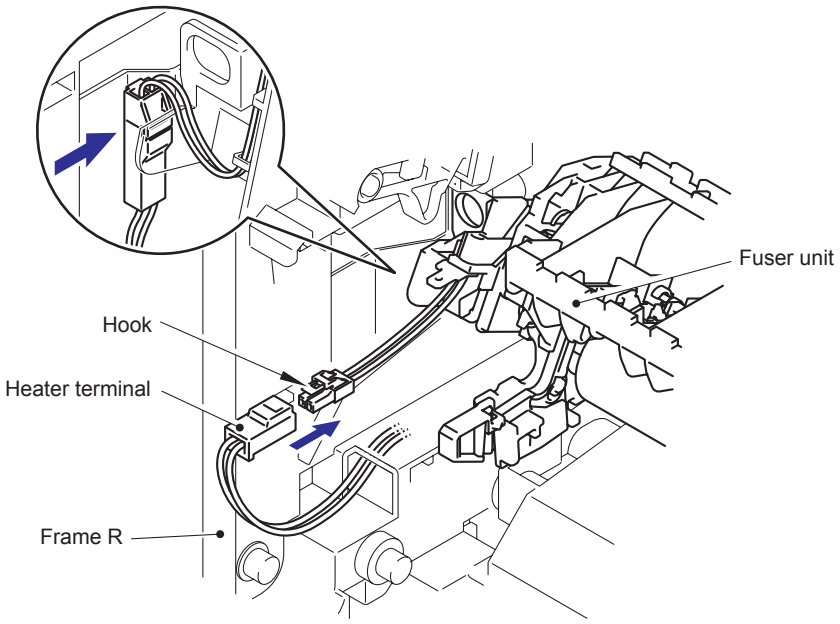

Fig. 4-30

(18) Secure the FU harness cover 1 with the pan B M4x20 Taptite screw.

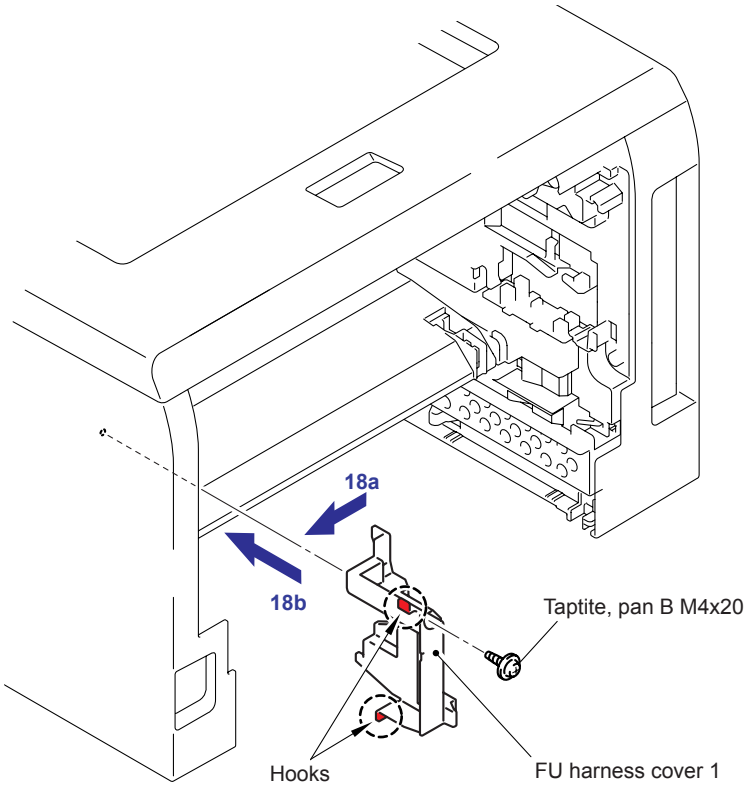

Fig. 4-31

Note :

- Do not sandwich the harness of the heater terminal by the FU harness cover 1.

Confidential

(19) Catch the Arm of the Rear chute ASSY onto the Pin of the machine body and install the Rear chute ASSY.

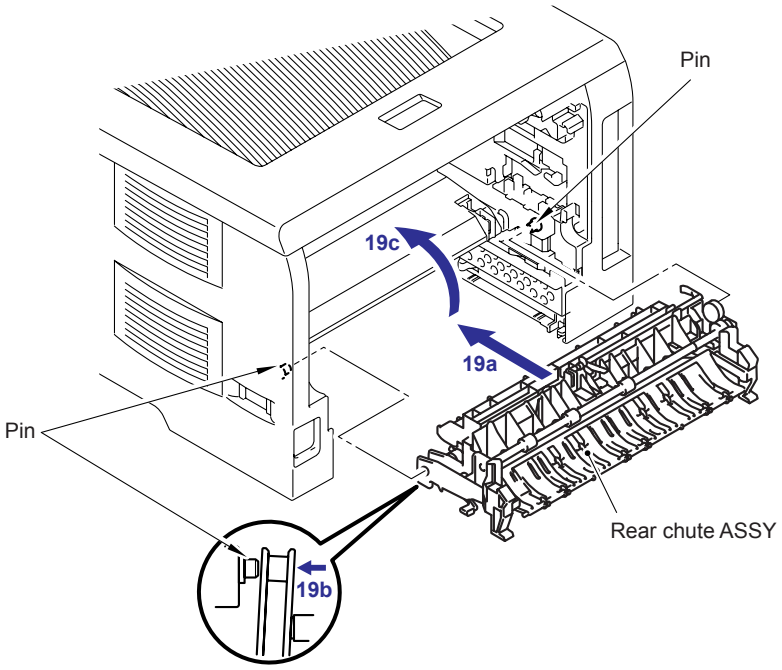

Fig. 4-32

(20) Catch the Pins of the Outer chute ASSY onto the Back cover.

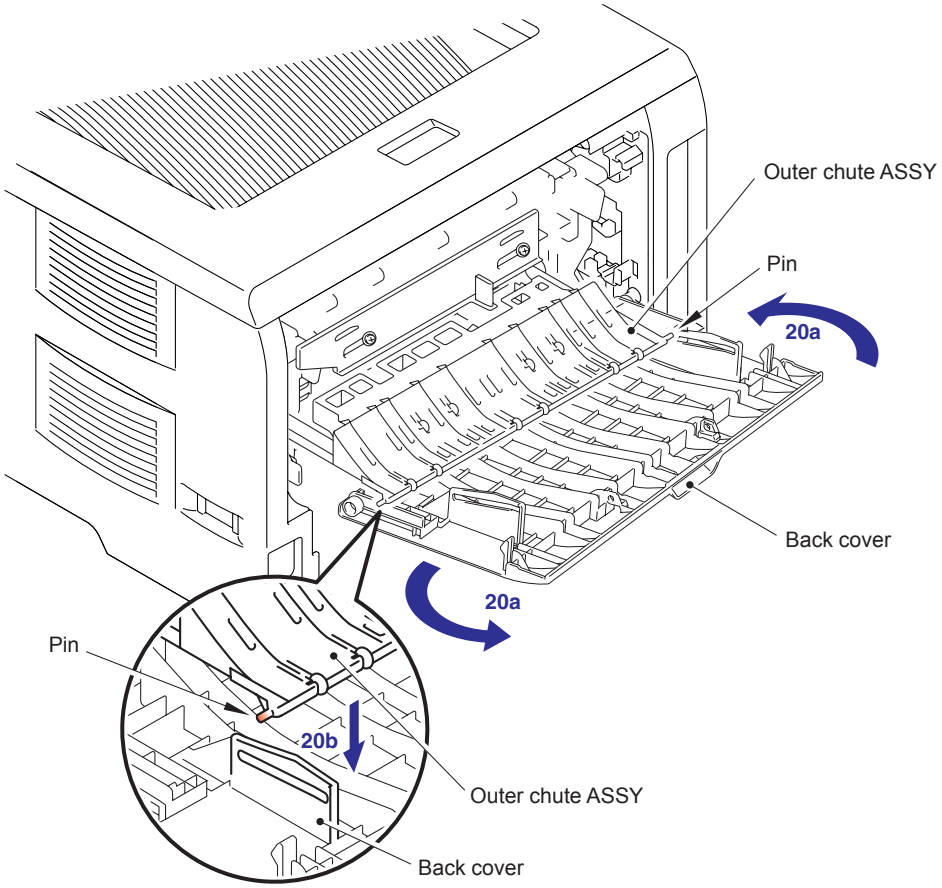

Fig. 4-33

Confidential

(21) Catch the Arm of the Back cover onto the Pin of the machine body and install the Back cover, and close the Back cover.

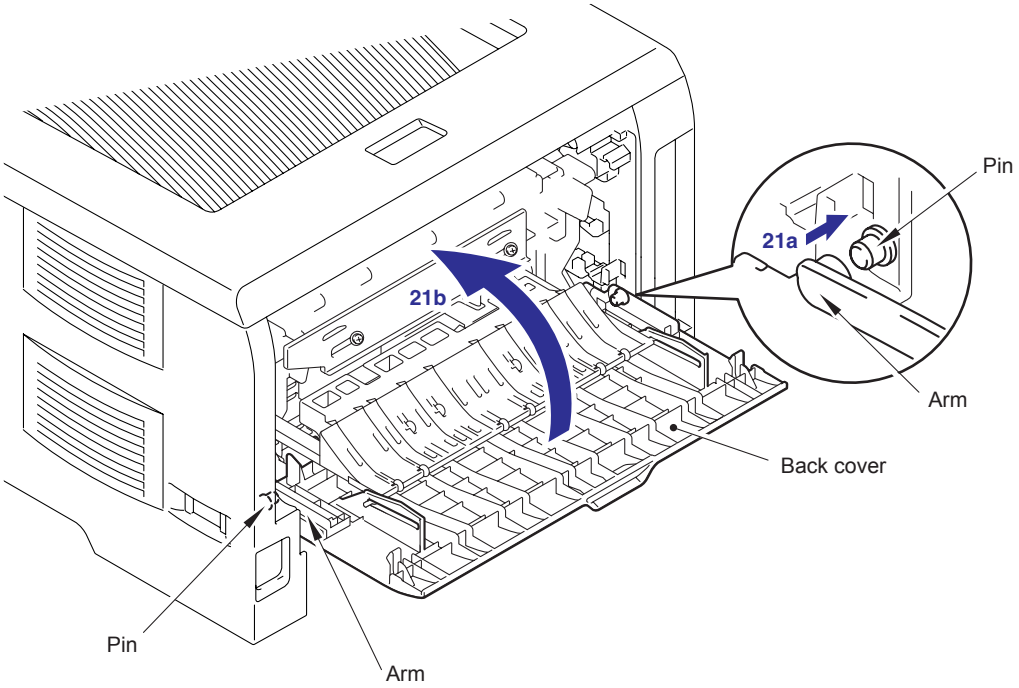

Fig. 4-34

Set the following parts after assembling.

- Set the DX feed ASSY or DX blank cover.
- Install the Drum/toner ASSY into the Printer.
- Put the Paper into the Paper tray.
- Reset the count of the Fuser unit and Laser unit after part replacement.
  (Refer to "2.2 Reset Parts Life Menu" in Chapter 7.)

1.2.2 Paper feeding kit for tray 1, 2, 3

< Uninstalling Procedure >

Check that the following before entering the procedures.

- Make sure that the AC cord is disconnected from the printer.
- Make sure that the Paper is removed from the Paper tray.

(1) Pull up the back side of the Separation pad ASSY.

(2) Push the Hooks provided on both sides of the Separation pad ASSY inwards.

(3) Pull up the Separation pad ASSY.

(4) Remove the Separation pad spring.

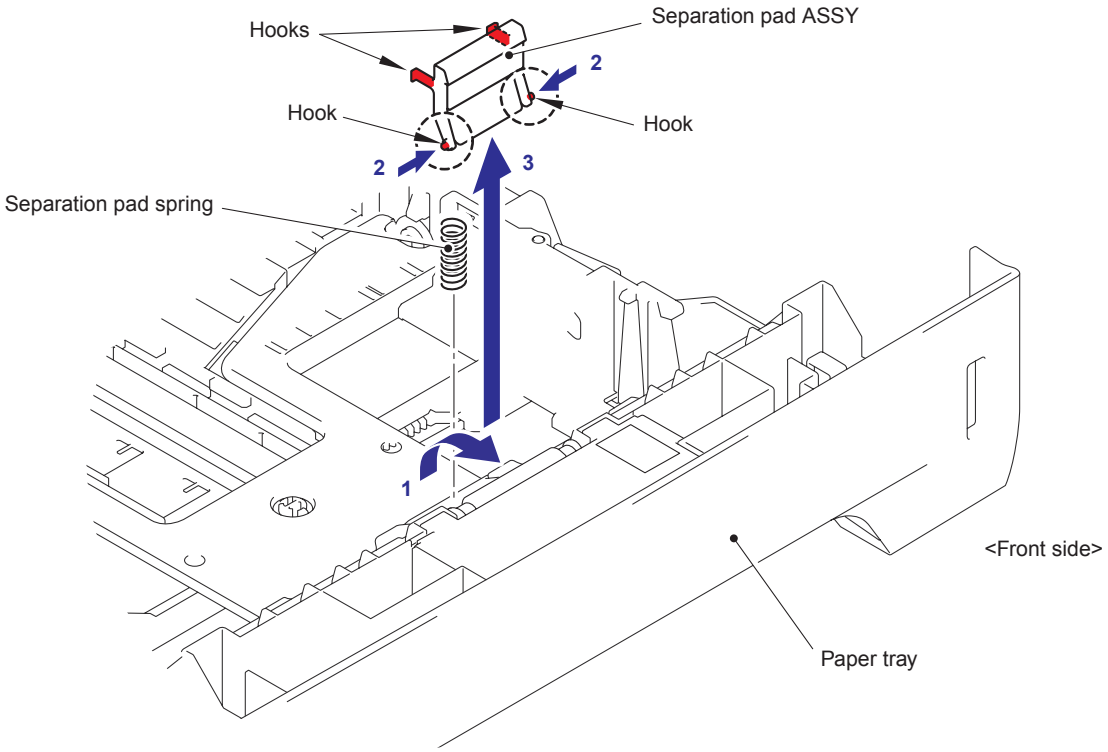

Fig. 4-35

(5) Turn the Printer upside down.

Note :

- Pull out and put into the paper tray so that the Roller holder ASSY is lowered.
- If the Roller holder ASSY is remained up, it cannot be removed.

(6) Push the Lift arm to the direction of the arrow 6a and pull out the pin of the Roller holder ASSY. Then, turn the Roller holder ASSY to the direction of the arrow 6b.

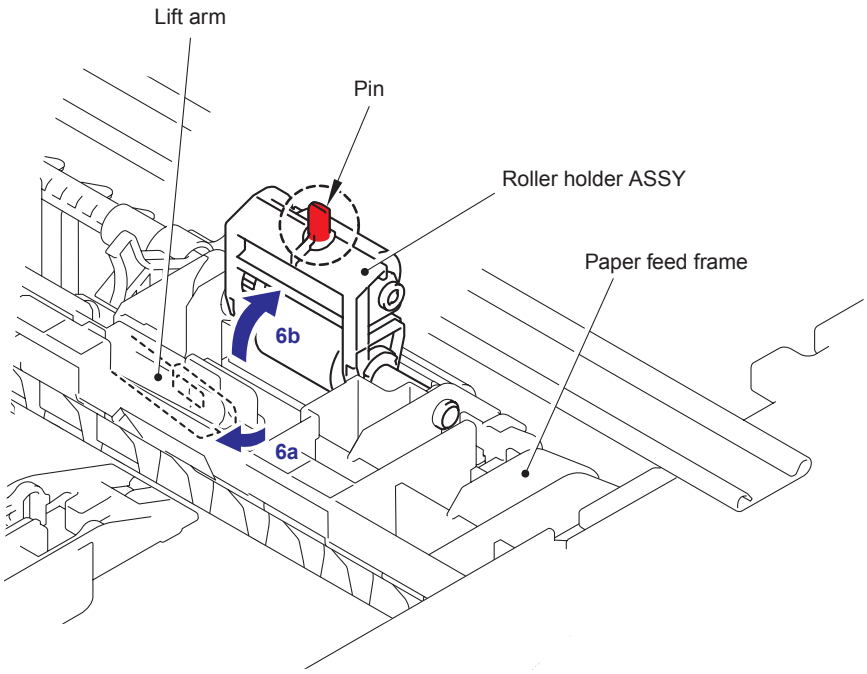

Fig. 4-36

Confidential

(7) Slide the Roller holder ASSY to the direction of the arrow 7a. Then, lift up the gear side of the Roller holder ASSY to the direction of the arrow 7b and pull it out to the direction of the arrow 7c to remove.

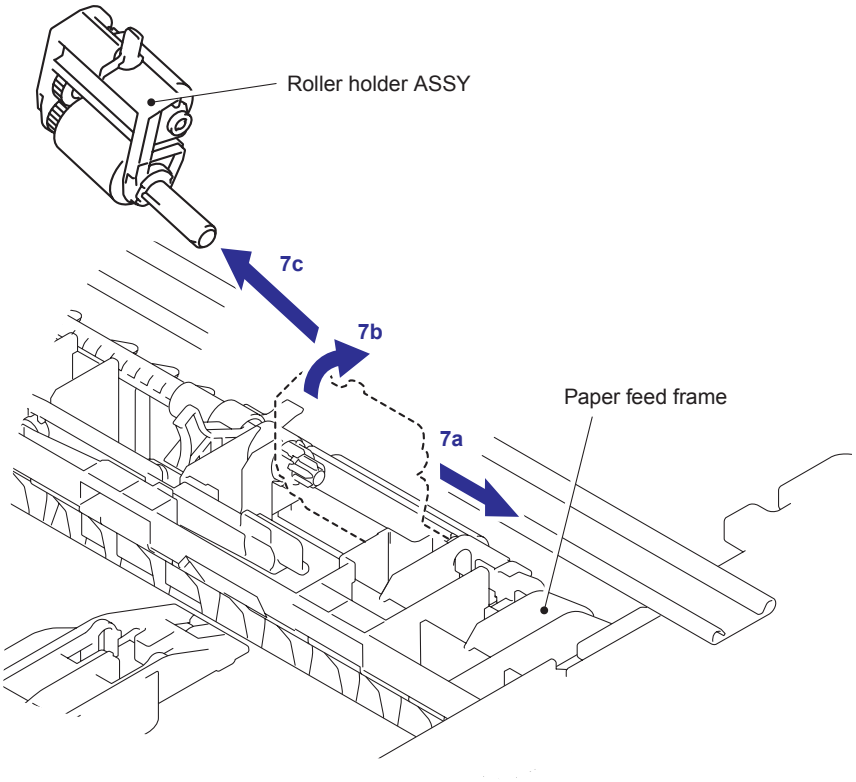

Fig. 4-37

Confidential

< Installing Procedure >

(1) Install the Roller holder ASSY.

Note :

- When assembling the roller holder ASSY, align the section "A" on the shaft of the roller holder ASSY with the hole on the paper feed frame.

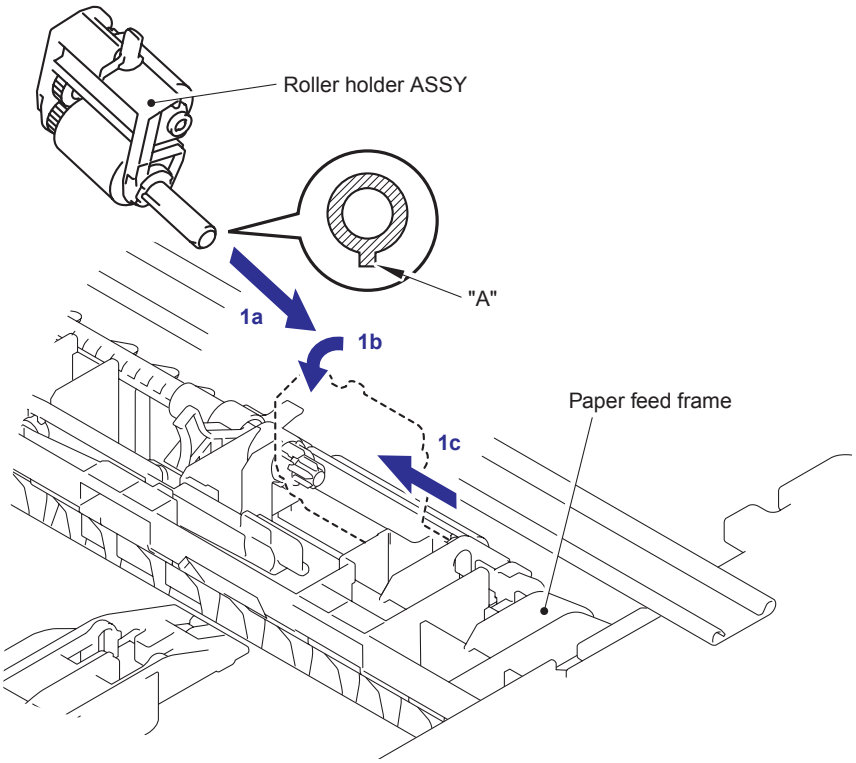

Fig. 4-38

Confidential

(2) Assemble the Lift arm onto the Pin of the Roller holder ASSY.

(3) Place the Printer on its base.

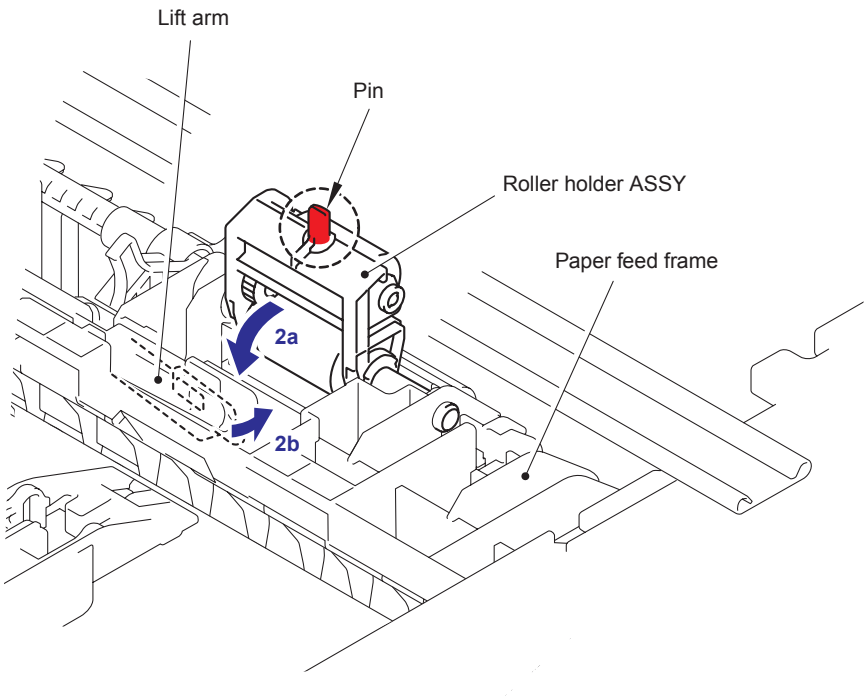

Fig. 4-39

(4) Install the DX feed ASSY or DX blank cover, and install the Drum/toner ASSY.

(5) Set the Separation pad spring.

(6) Put the Hooks of the Separation pad ASSY into the Paper tray, and turn the Separation pad ASSY to the direction of the arrow 6c to catch the Hooks into the Paper tray.

Note :

- Check that the Separation pad spring is assembled correctly.

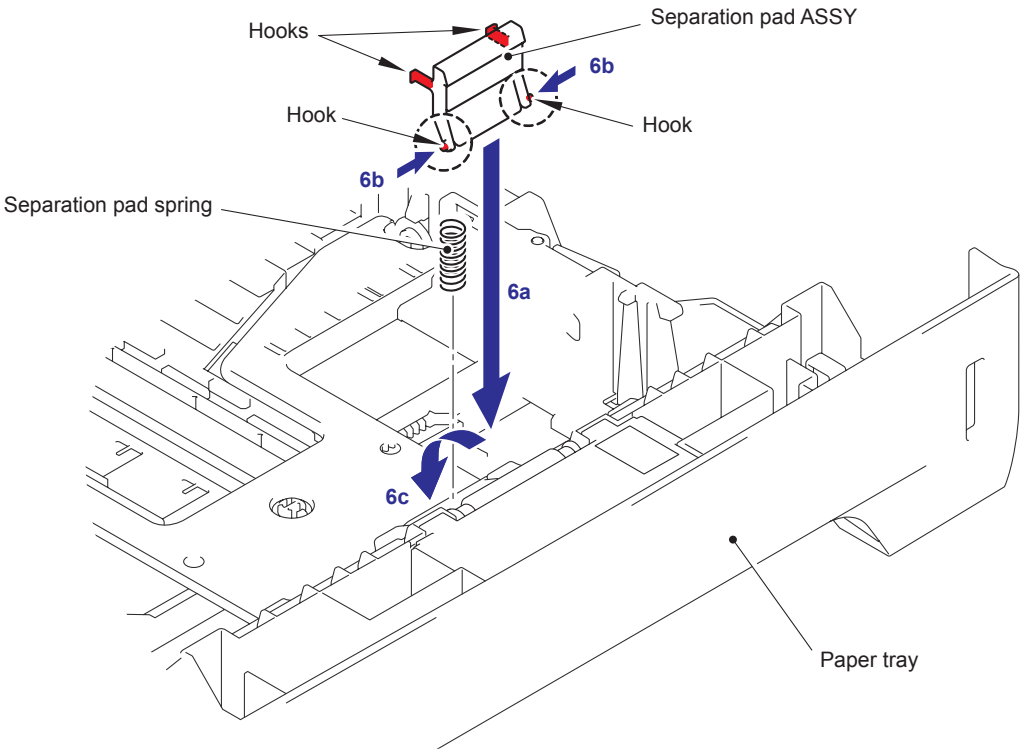

Fig. 4-40

(7) Put the Paper tray into the Printer.

* Reset the count of the PF Kit after part replacement.

1.2.3 Paper feeding kit for MP tray

< Uninstalling Procedure >

Check that the following before entering the procedures.

- Make sure that the AC cord is disconnected from the printer.
- Make sure that the Drum/toner ASSY is removed.

(1) Open the MP feed frame cover.

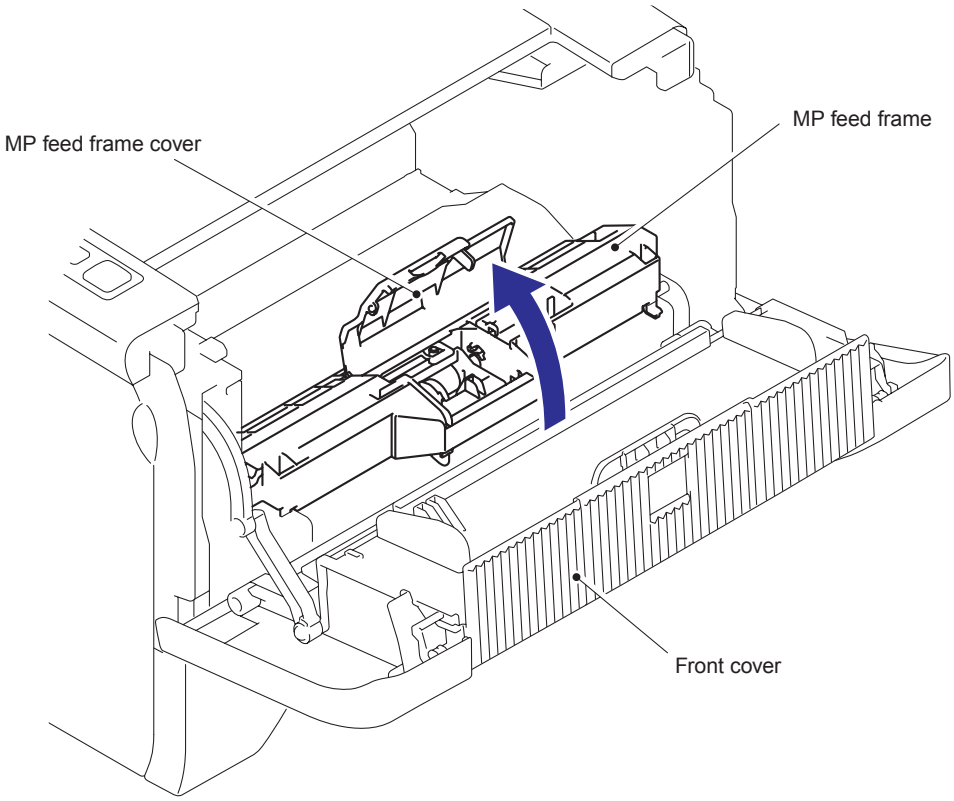

Fig. 4-41

Confidential

(2) Remove the Holder bearing MP.

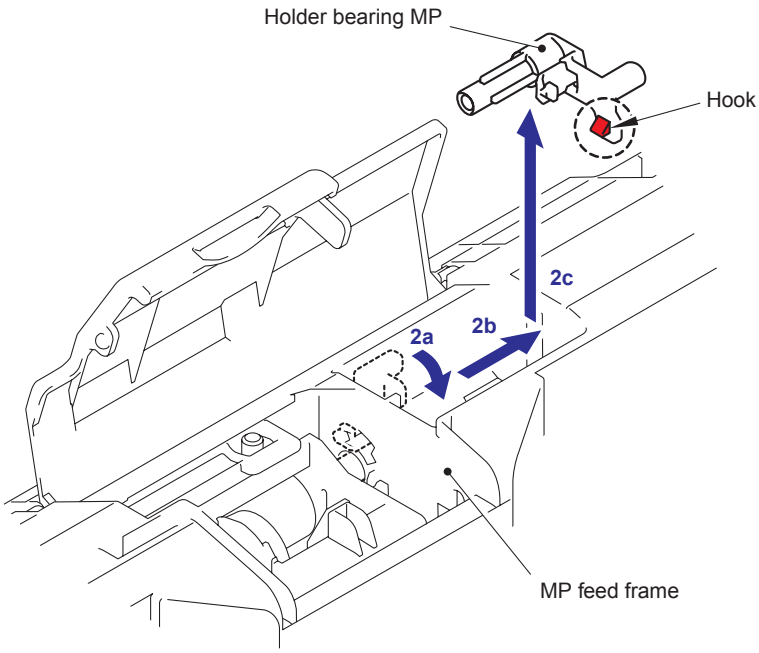

Fig. 4-42

(3) Lift up the Lift arm MP to release it from the Pin of the MP roller holder ASSY.

(4) Slide the MP roller holder ASSY to the direction of the arrow 4a and put it up to remove.

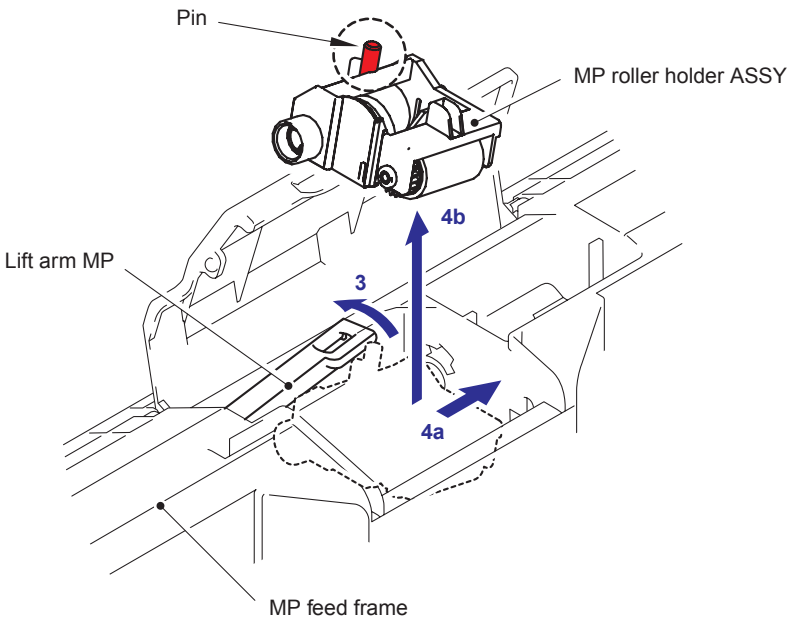

Fig. 4-43

Confidential

(5) Turn the back side of the Separation pad ASSY MP to the direction of the arrow 5a and put it up to remove.

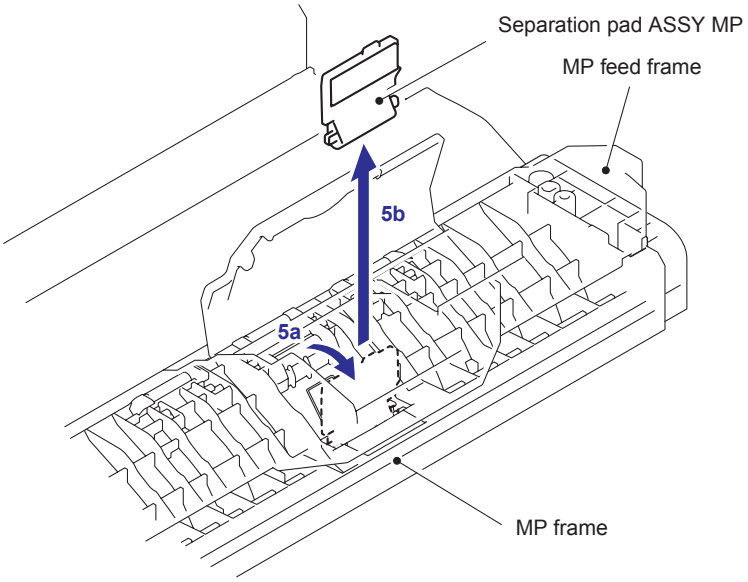

Fig. 4-44

< Installing Procedure >

(1) Put the Hook of the Separation pad ASSY MP into the MP feed frame and pull down the Separation pad ASSY MP to the direction of the arrow 1b until it is locked.

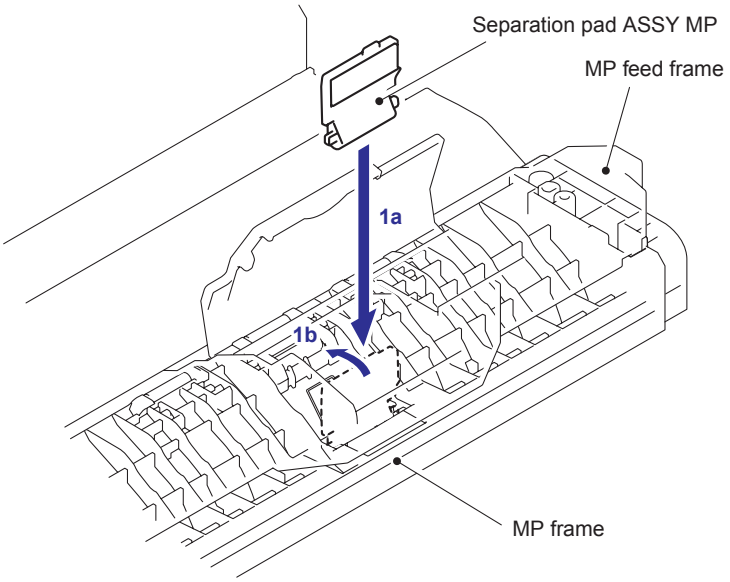

Fig. 4-45

(2) Lift up the Lift arm MP and put the MP roller holder ASSY into the MP feed frame. Put the Pin of the MP roller holder ASSY into the hole of the Lift arm MP.

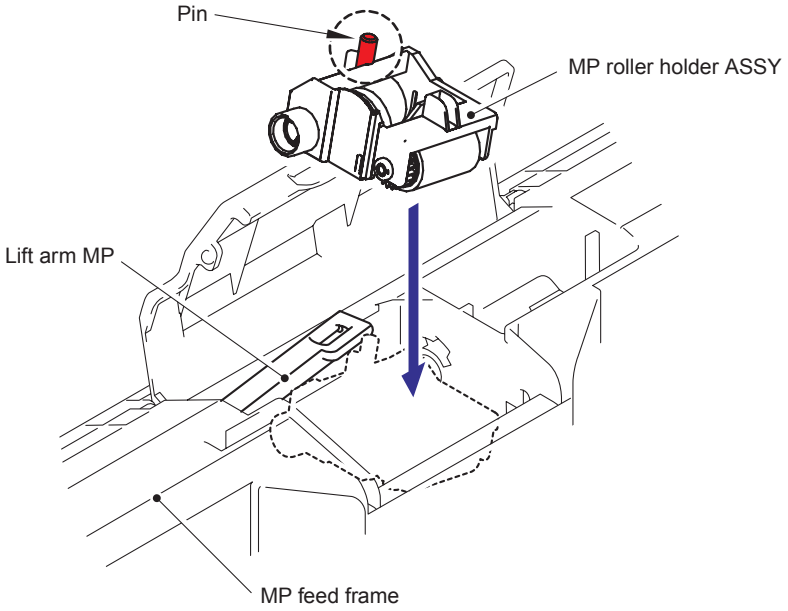

Fig. 4-46

Confidential

(3) Put the Holder bearing MP into the MP feed frame and turn the Holder bearing MP to the direction of the arrow 3c to lock.

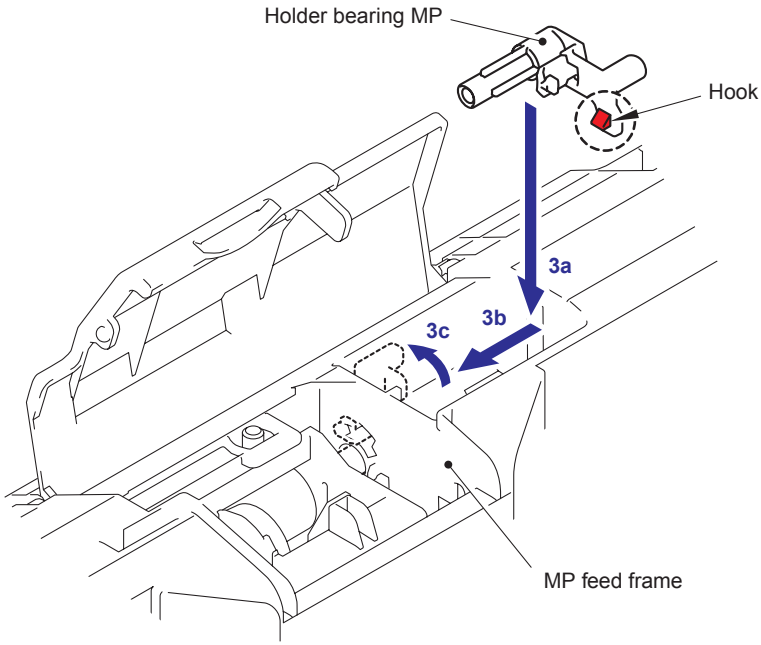

Fig. 4-47

(4) Close the MP feed frame cover.

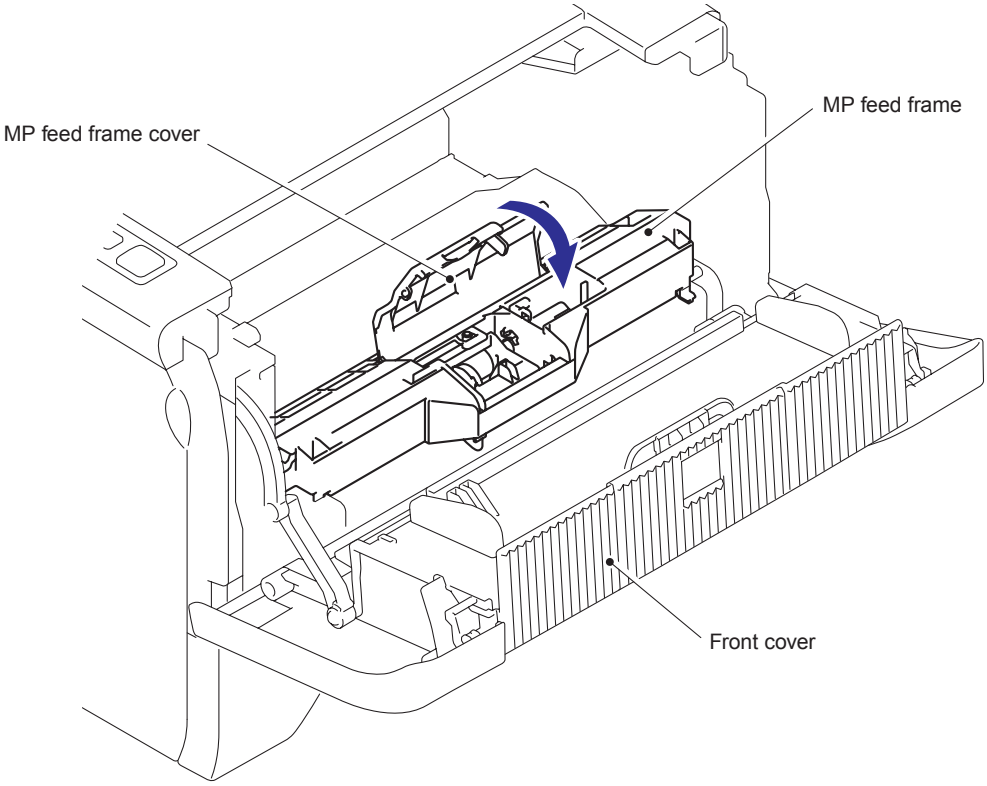

Fig. 4-48

(5) Install the Drum/toner ASSY into the Printer.

(6) Close the Front cover.

* Reset the count of the PF Kit MP after part replacement.

CHAPTER 5

DISASSEMBLY/REASSEMBLY

CHAPTER 5 DISASSEMBLY/REASSEMBLY

This chapter details procedures for disassembling and reassembling the machine together with related notes. The disassembly order flow provided enables you to see at a glance the quickest way to get to component(s) involved.

At the start of a disassembly job, you check the disassembly order flow that guides you through a shortcut to the object components.

This chapter also covers screw tightening torques and lubrication points to which the specified lubricants should be applied during reassembly jobs.

CONTENTS

1. SAFETY PRECAUTIONS 5-1
2. PACKING 5-2
3. SCREW TORQUE LIST 5-3
4. LUBRICATION 5-5
5. GEAR LAYOUT DRAWING 5-7
6. HARNESS ROUTING 5-8
7. DISASSEMBLY FLOW CHART 5-18
8. DISASSEMBLY PROCEDURE 5-19
   - 8.1 Paper Tray 5-20
   - 8.2 Back Cover 5-23
   - 8.3 Rear Chute ASSY 5-25
   - 8.4 Fuser Unit 5-27
   - 8.5 Tray MP ASSY 5-31
   - 8.6 MP Tray Cover ASSY/Process Cover ASSY/Emblem cover 5-32
   - 8.7 Access Cover/Side Cover L 5-35
   - 8.8 Main PCB 5-36
   - 8.9 Side Cover R 5-37
   - 8.10 Top Cover ASSY (LED model) 5-38
     - 8.10.1 Panel PCB ASSY 5-39
     - 8.10.2 SW Key A/B 5-39
     - 8.10.3 Inner Chute/Pinch Roller Holder 5-41
   - 8.11 Top Cover ASSY/Panel Plate Printed ASSY (LCD model) 5-42
     - 8.11.1 Inner Chute/Pinch Roller Holder 5-43
     - 8.11.2 Panel PCB ASSY 5-45
     - 8.11.3 SW Key A/B/C /Set Key Printed ASSY 5-46
     - 8.11.4 LCD Holder ASSY 5-49
   - 8.12 Gear Plate Calking ASSY/Develop Joint/Main Motor ASSY 5-51
   - 8.13 Main Shield Plate ASSY 5-53
   - 8.14 Relay Rear PCB ASSY/Connector 5-56
   - 8.15 Relay Front PCB ASSY 5-58
   - 8.16 Drive Release Link 5-59

8.17 MP Solenoid ASSY 5-60
8.18 T1 Solenoid ASSY 5-61
8.19 Toner Sensor PCB ASSY 5-62
8.20 Register Solenoid 5-63
8.21 Ejector Solenoid 5-63
8.22 Front cover sensor ASSY 5-64
8.23 New Toner Actuator 5-64
8.24 Gear 17/20/23 5-65
8.25 Filter 5-67
8.26 Laser Unit 5-68
8.27 LVPS PCB Unit 5-69
8.28 High-Voltage PS PCB ASSY 5-73
8.29 Wireless LAN PCB (PCB T60H989 ASSY 04) (Wireless LAN model) 5-75
8.30 Toner LED PCB Unit ASSY 5-76
8.31 Fan Motor 60 Unit 5-77
8.32 Fan Motor 60 Unit LV 5-78
8.33 FRAME L ASSY 5-79
8.34 MP Unit 5-81
8.35 Regist Actuator Rear/Regist Actuator Spring 5-87
8.36 Regist Actuator Front/Regist Actuator Spring 5-89
8.37 Roller Holder ASSY 5-90
8.38 PE Actuator/Edge Actuator/Edge Actuator Spring 5-91
8.39 PE EG Sensor ASSY 5-93

9. DISASSEMBLY PROCEDURE (LT-5300) 5-95

9.1 Paper Tray 5-95
9.2 LT Front Cover ASSY 5-98
9.3 LT Rear Cover 5-99
9.4 LT Side Cover L 5-100
9.5 LT Side Cover R 5-101
9.6 LT PCB ASSY 5-102
9.7 Connector: 55533-1219 5-103
9.8 Connector: 54702-1219 5-103
9.9 Gear 24 LT 5-104
9.10 Collar 6 5-105
9.11 LT Solenoid ASSY 5-109
9.12 Roller Holder ASSY 5-109
9.13 Edge Actuator Spring 5-110
9.14 PE Actuator , Edge Actuator 5-111
9.15 LT Sensor PCB ASSY 5-112

1. SAFETY PRECAUTIONS

To avoid creating secondary problems by mishandling, follow the warnings and precautions below during maintenance work.

WARNING

- Always turn off the power switch and unplug the power cord from the power outlet before accessing any parts inside the machine.
- When opening the front cover or back cover to access any parts inside the machine, never touch the shaded parts shown in the following figures.
- DO NOT use flammable substances such as alcohol, benzine, thinner or any type of spray to clean the inside or outside of the machine. Doing this may cause a fire or electrical shock.

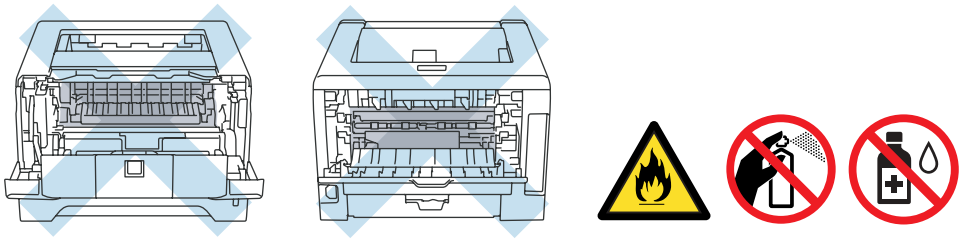

- Be careful not to lose screws, washers, or other parts removed.
- Be sure to apply grease to the gears and applicable positions specified in this chapter.
- When using soldering irons or other heat-generating tools, take care not to accidentally damage parts such as wires, PCBs and covers.
- Static electricity charged in your body may damage electronic parts. When transporting PCBs, be sure to wrap them in conductive sheets.
- When replacing the PCB and all the other related parts, put on a grounding wrist band and perform the job on a static mat. Also take care not to touch the conductor sections on the flat cables or on the wire harness.
- When connecting or disconnecting cable connectors, hold the connector body, not the cables. If the connector has a lock, release the connector lock first to release it.
- After a repair, check not only the repaired portion but also all connectors. Also check that other related portions are functioning properly before operational checks.
- After disconnecting flat cables, check that each cable is not damaged at its end or short-circuited.
- When connecting flat cables, do not insert them at an angle. After insertion, check that the cables are not at an angle.

2. PACKING

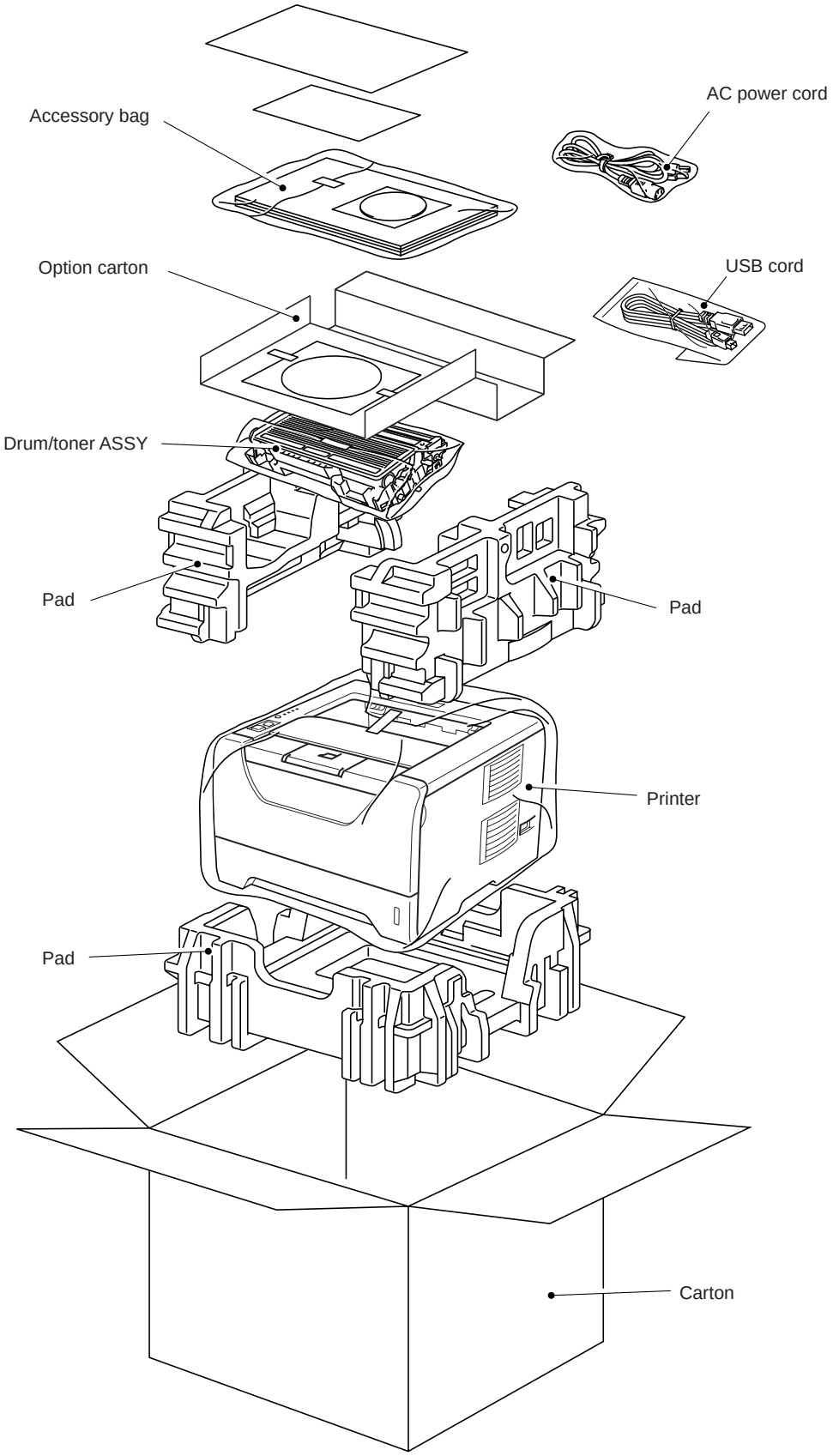

Fig. 5-1

3. SCREW TORQUE LIST

Location of screw	Screw type	Q'ty	Tightening torque N · m (kgf · cm)
FU harness cover 1	Taptite pan B M4x20	1	0.7±0.1 (7±1)
Fuser unit	Taptite pan B M4x20	1	0.7±0.1 (7±1)
Process cover stopper	Taptite cup B M4x10	1	0.5±0.1 (5±1)
Emblem cover	Taptite cup B M3x10	2	0.5±0.1 (5±1)
Side cover L	Taptite bind B M4x12	2	0.7±0.1 (7±1)
Shield cover	Taptite cup S M3x6 SR	4	0.75±0.1 (7.5±1)
Main PCB	Taptite cup S M3x6 SR	4	0.75±0.1 (7.5±1)
	Screw pan M3x6	2	0.5±0.1 (5±1)
Side cover R	Taptite bind B M4x12	2	0.7±0.1 (7±1)
Top cover ASSY	Taptite bind B M4x12	2	0.7±0.1 (7±1)
Panel PCB ASSY	Taptite cup B M3x8	3	0.5±0.05 (5±0.5)
Inner chute	Taptite bind B M4x12	6(7)	0.8±0.1 (8±1)
Gear plate calking ASSY	Taptite bind B M4x12	8	0.9±0.05 (9±0.5)
	Taptite cup S M3x6 SR	1	0.7±0.1 (7±1)
Main motor ASSY	Taptite cup S M3x6	4	0.7±0.1 (7±1)
Plate	Taptite bind B M4x12	2	0.8±0.1 (8±1)
Main shield plate ASSY	Taptite bind B M4x12	3	0.9±0.1 (9±1)
	Taptite cup S M3x6	1	0.7±0.1 (7±1)
MP solenoid ASSY	Taptite bind B M3x10	1	0.5±0.05 (5±0.5)
Spring	Taptite cup B M3x8	1	0.4±0.1 (4±1)
T1 solenoid ASSY	Taptite bind B M3x10	1	0.5±0.05 (5±0.5)
Register solenoid ASSY	Taptite bind B M3x10	1	0.5±0.05 (5±0.5)
Ejector solenoid ASSY	Taptite bind B M3x10	1	0.5±0.1 (5±1)
New toner actuator	Taptite cup B M2x6	1	0.13±0.03 (1.3±0.3)
Laser unit	Taptite cup S M3x6	5	0.7±0.1 (7±1)
Base plate LV	Taptite bind B M4x12	5	0.8±0.1 (8±1)
	Screw, pan (S/P washer) M3.5X7.5 SR	1	0.5±0.05 (5±0.5)
LV insulation sheet	Taptite bind B M4x12	1	0.8±0.1 (8±1)
SW holder ASSY	Taptite bind B M4x12	1	0.8±0.1 (8±1)
Safety louver	Taptite bind B M3x10	1	0.5±0.1 (5±1)
Base plate HV	Taptite bind B M4x12	4	0.8±0.1 (8±1)
HV insulation sheet	Taptite bind B M4x12	1	0.8±0.1 (8±1)
High-voltage PS PCB ASSY	Taptite bind B M4x12	1	0.8±0.1 (8±1)
Toner LED PCB unit ASSY	Taptite pan B M3x8	1	0.5±0.1 (5±1)
Frame L	Taptite bind B M4x12	4	0.8±0.1 (8±1)
(underbar)		2	0.7±0.1 (7±1)

Confidential

Location of screw	Screw type	Q'ty	Tightening torque N · m (kgf · cm)
MP feed frame	Taptite bind B M3x8	2	0.5±0.1 (5±1)
MP PE sensor ASSY	Taptite bind B M3x8	1	0.5±0.1 (5±1)
MP frame	Taptite bind B M4x12	2	0.7±0.1 (7±1)
PE EG sensor ASSY	Taptite bind B M3x8	1	0.5±0.1 (5±1)
LT front cover	Taptite bind B M4x12	2	
LT rear cover	Taptite cup S M3x6 SR	2	
LT side cover L	Taptite bind B M4x12	1	
	Taptite cup S M3x6 SR	1	
LT side cover R	Taptite bind B M4x12	1	
	Taptite cup S M3x6 SR	1	
LT PCB ASSY	Taptite bind B M4x12	1	
Feed roller ground plate	Taptite cup S M3x6 SR	1	
LT drive uint	Taptite bind B M4x12	4	
Ground wire top	Taptite cup S M3x6	1	
LT solenoid ASSY	Taptite bind B M3x10	1	
LT frame L	Taptite bind B M4x12	2	
	Taptite cup S M3x6 SR	4	
LT frame R	Taptite cup S M3x6 SR	2	
LT front beam	Taptite cup B M3x12	2	
LT sensor PCB ASSY	Taptite bind B M3x8	1	

* The parenthesis shows the LCD model.

4. LUBRICATION

The kind of the lubricating oil (Maker name)	Lubrication point	Quantity of lubrication
BG-MU (Kanto Kasei)	Dev gear 37R joint drive Main motor ASSY Drum gear 82R	2mm dia. ball BG2
EM-D110 (Dow Corning)	Separation pad ASSY	2mm dia. ball EM2

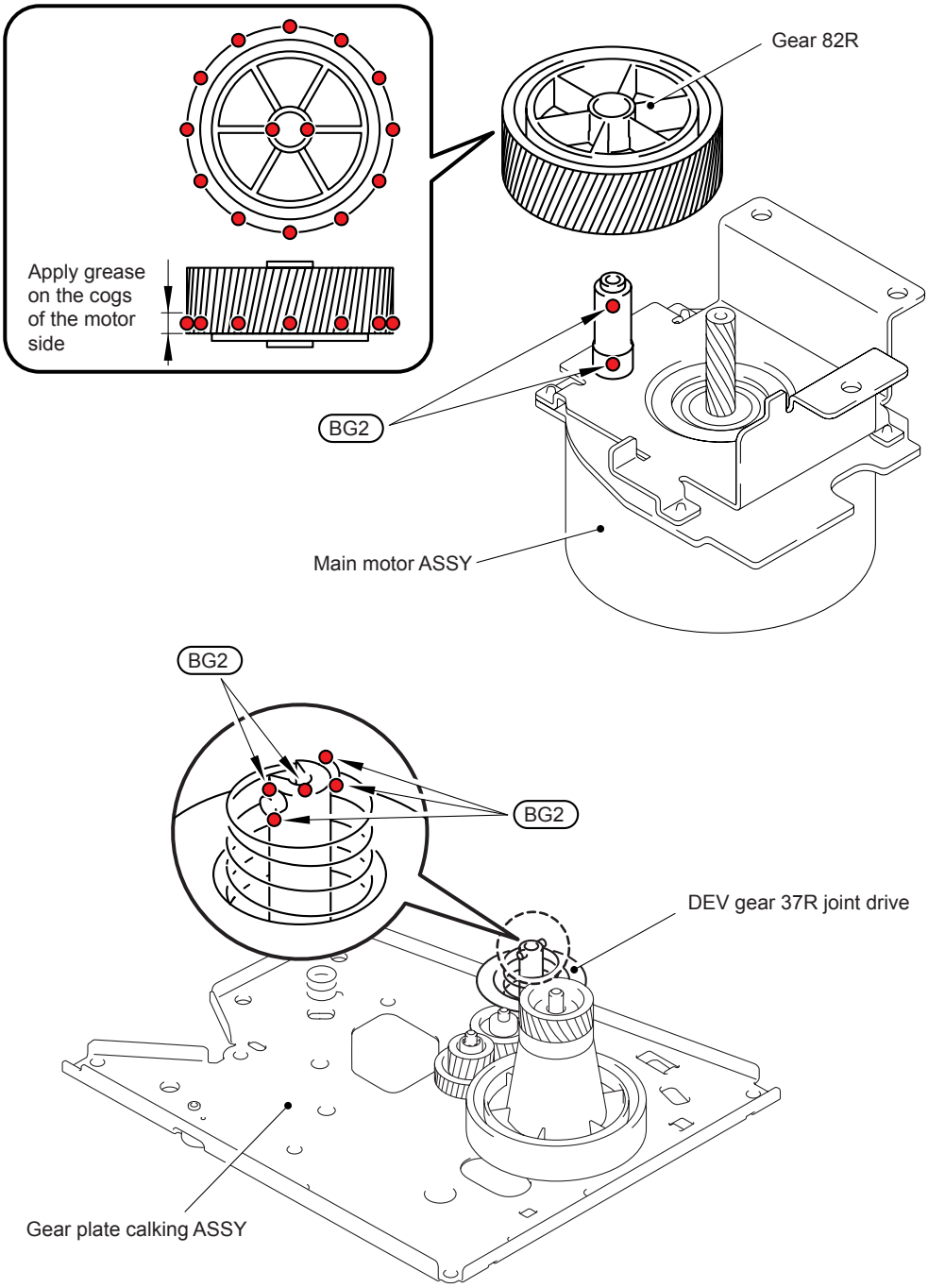

Fig. 5-2

Confidential

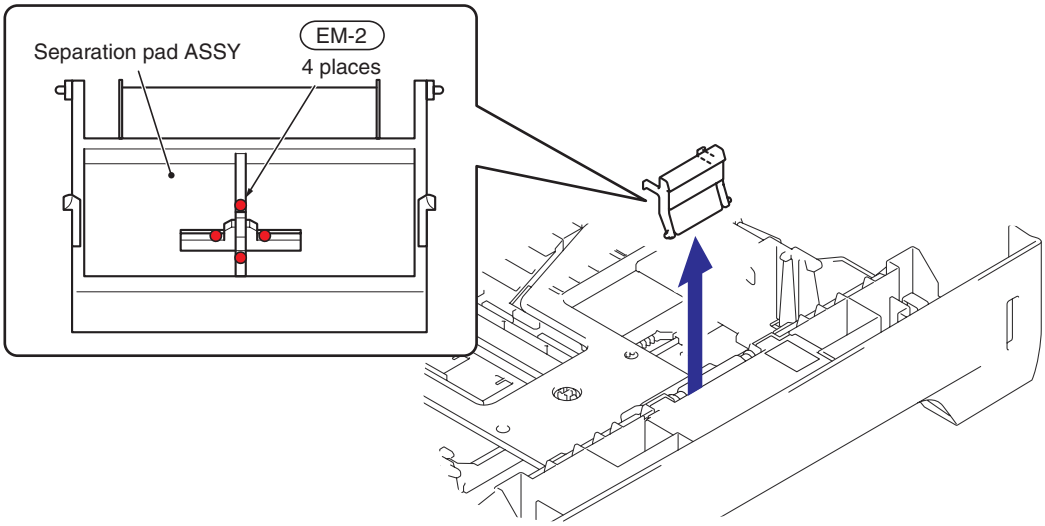

BG2: KANTO KASEI BG-MU (2mm dia. Ball)

Fig. 5-3

Confidential

5. GEAR LAYOUT DRAWING

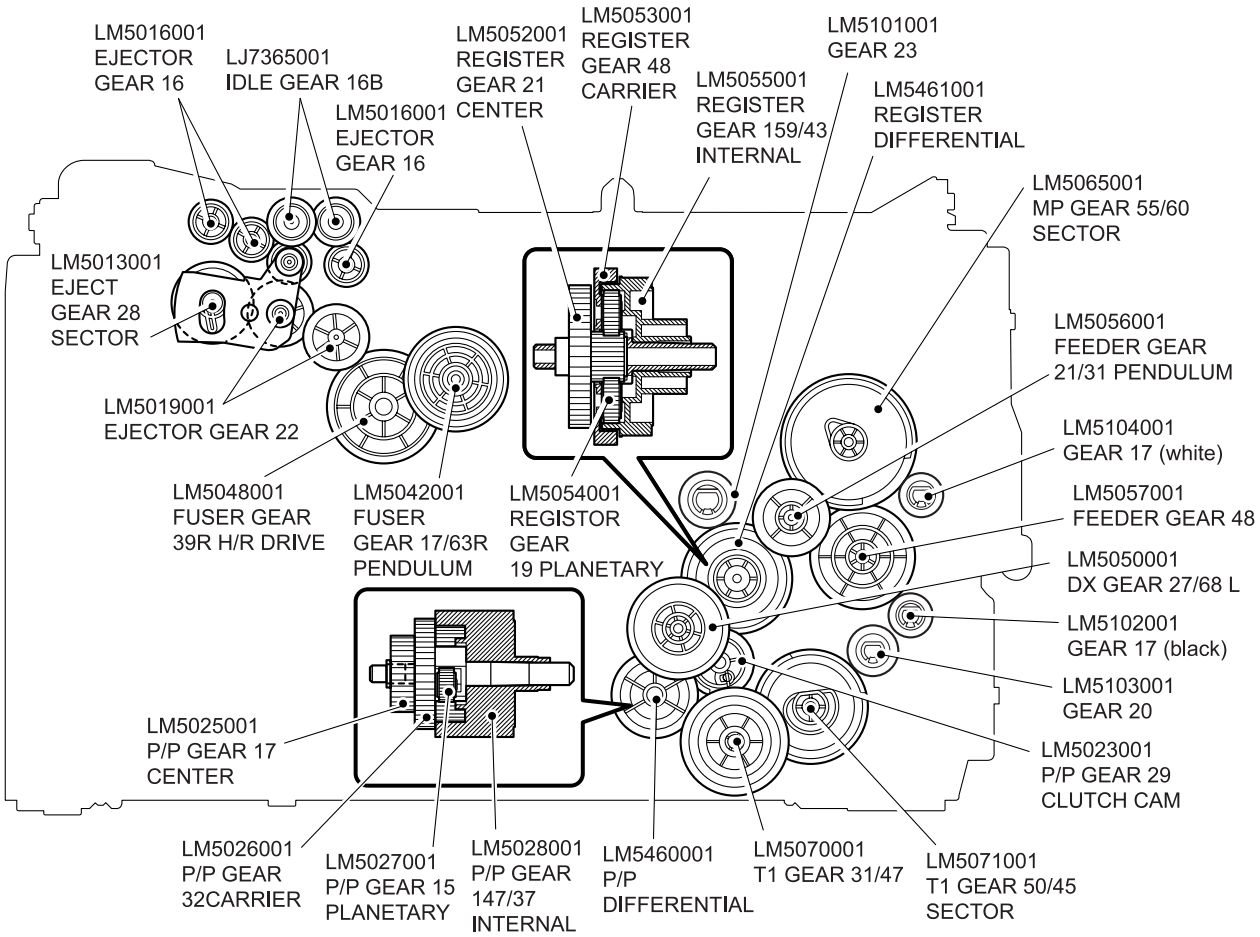

Fig. 5-4

6. HARNESS ROUTING

1 MP PE sensor ASSY

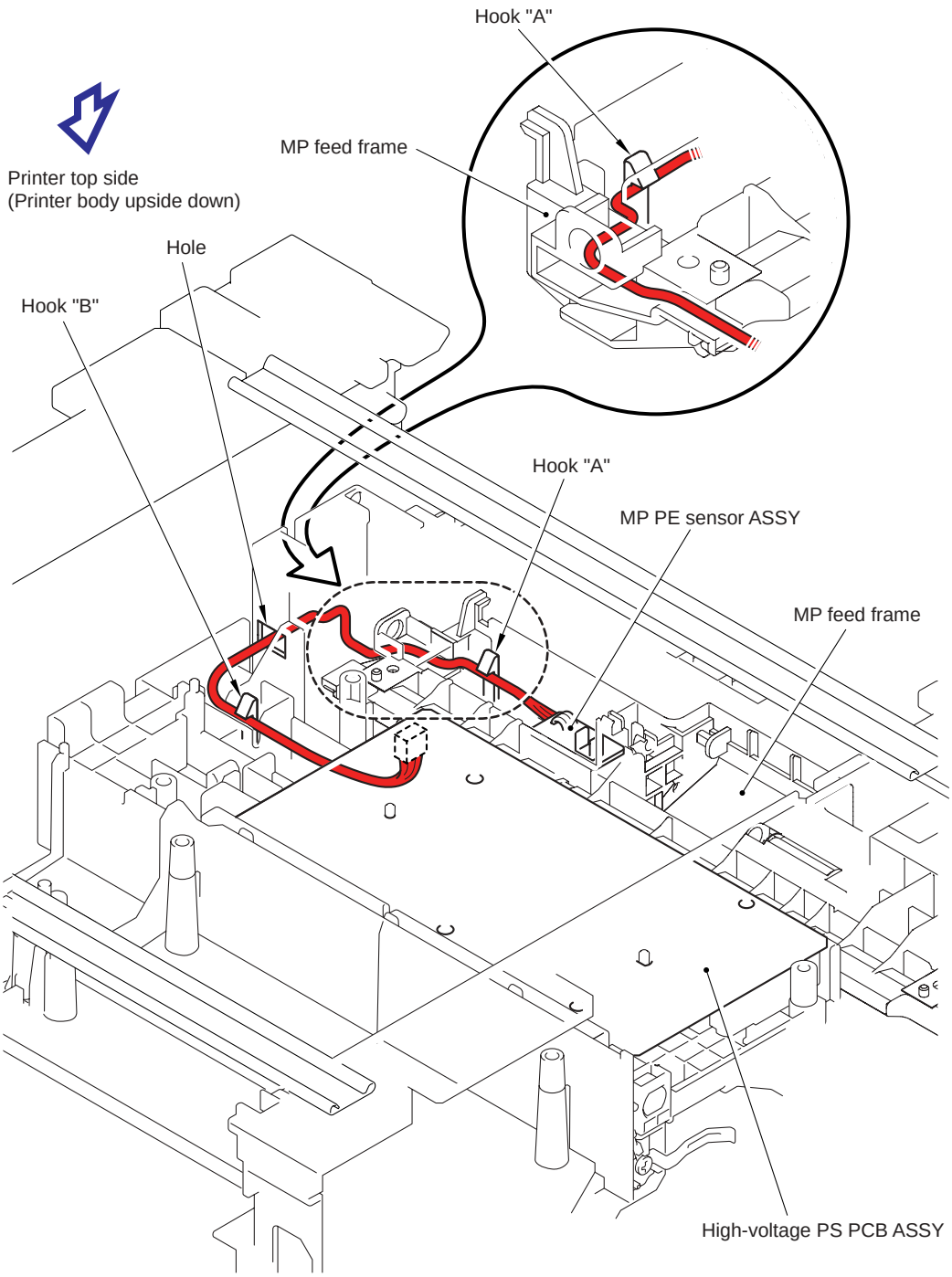

2 PE EG sensor ASSY

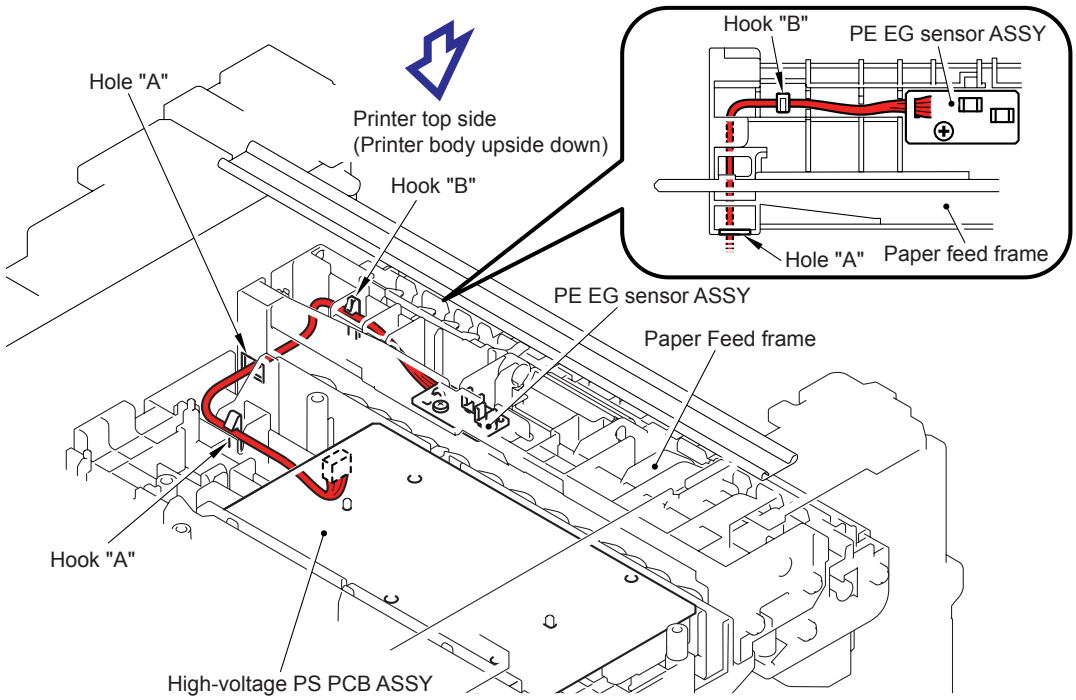

3 Front cover sensor ASSY

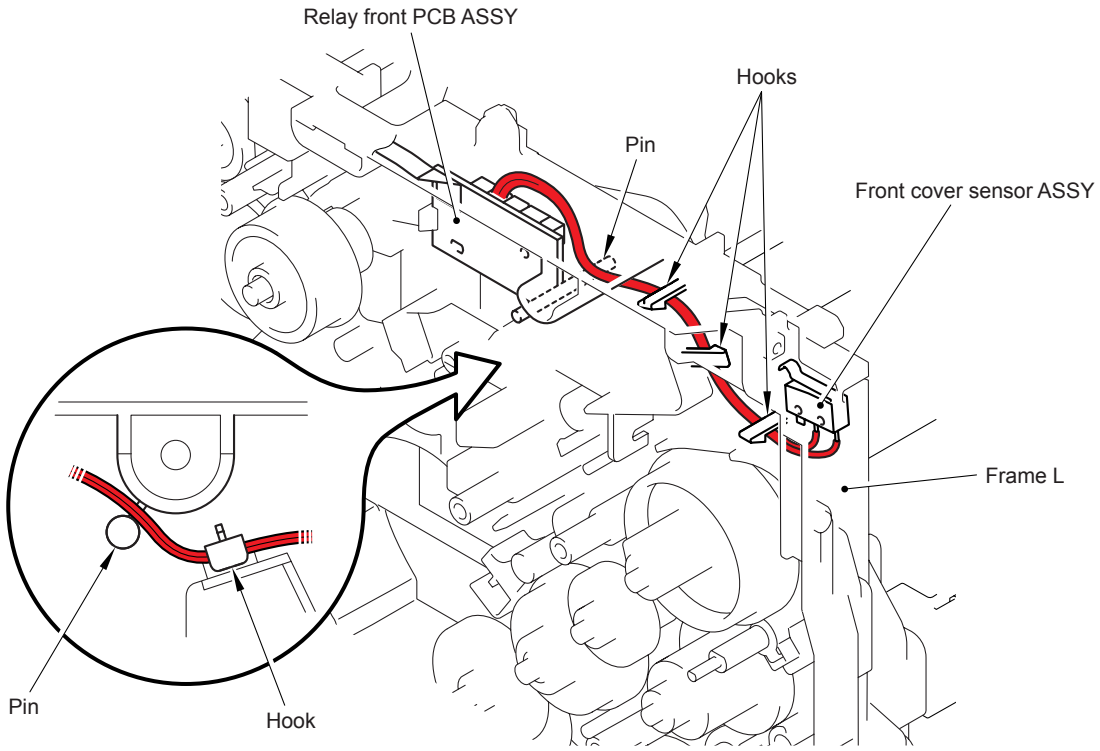

Confidential

4 Toner sensor PCB ASSY

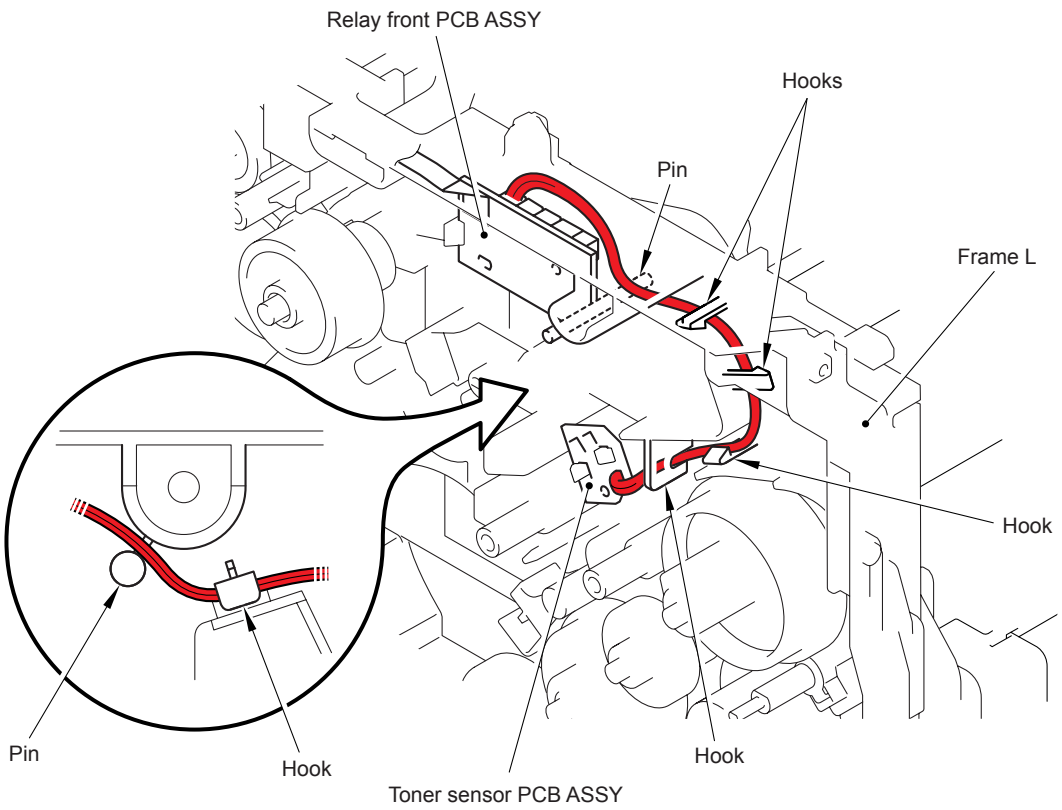

5 Regist solenoid ASSY

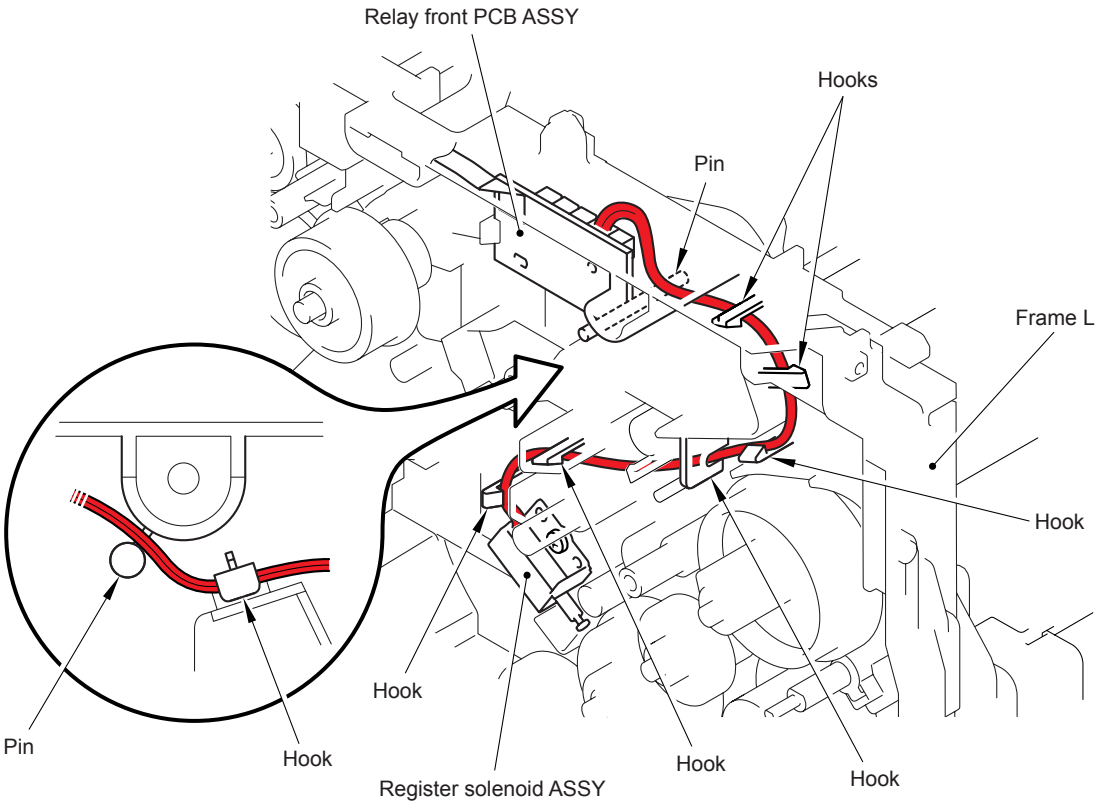

Confidential

6 MP solenoid ASSY

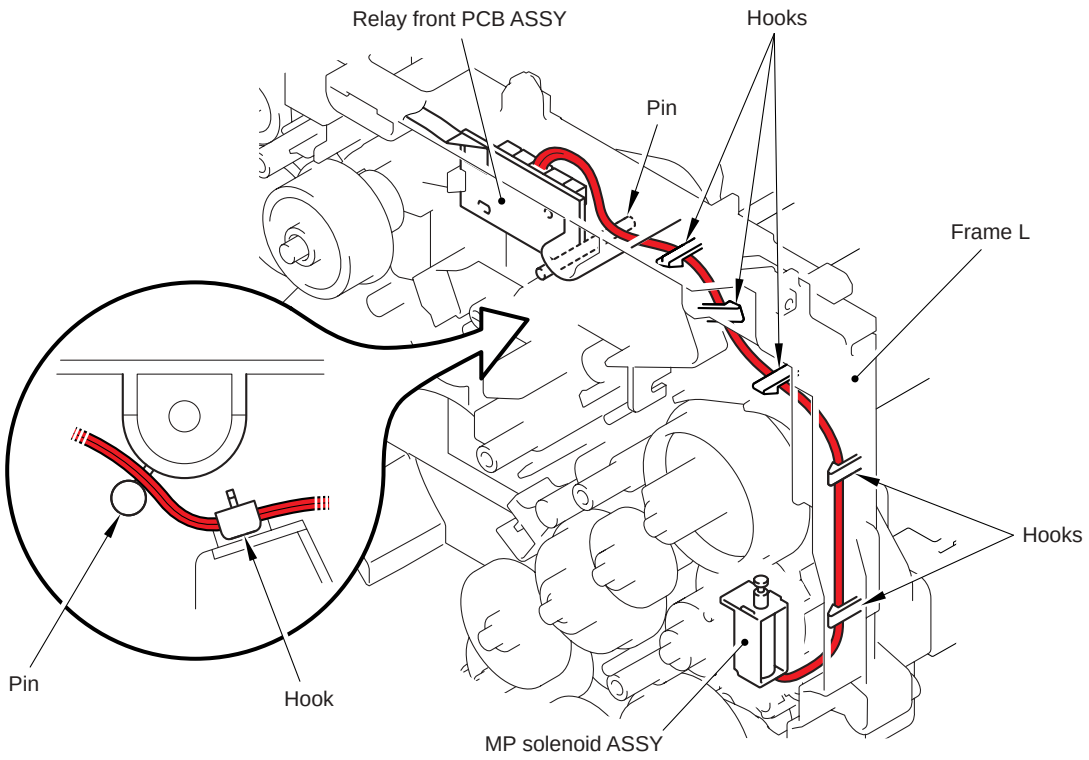

7 T1 solenoid ASSY

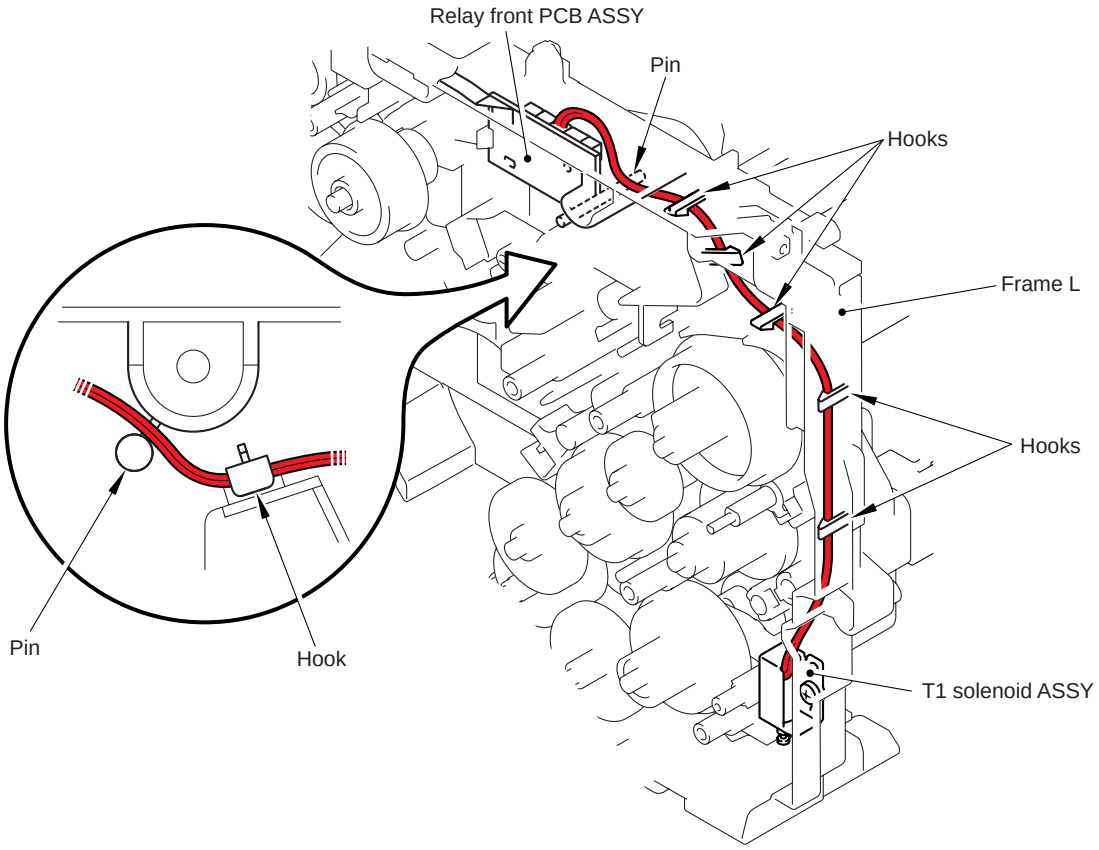

Confidential

8 Relay front PCB ASSY

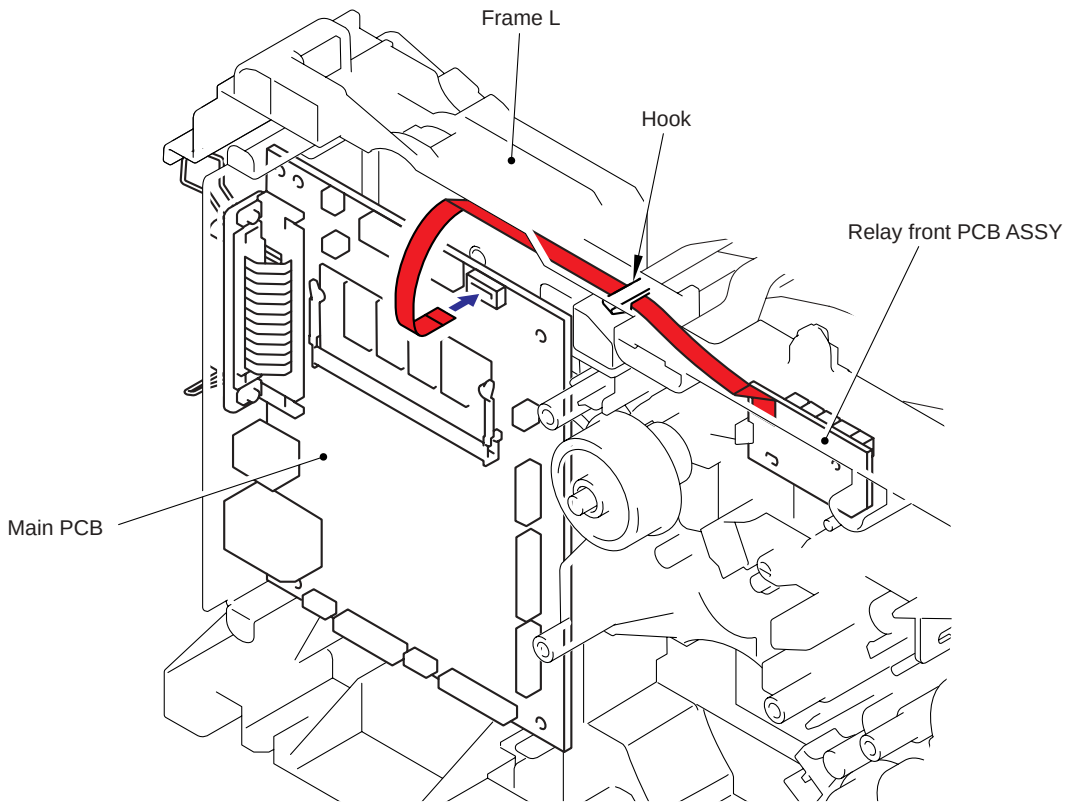

9 Laser unit

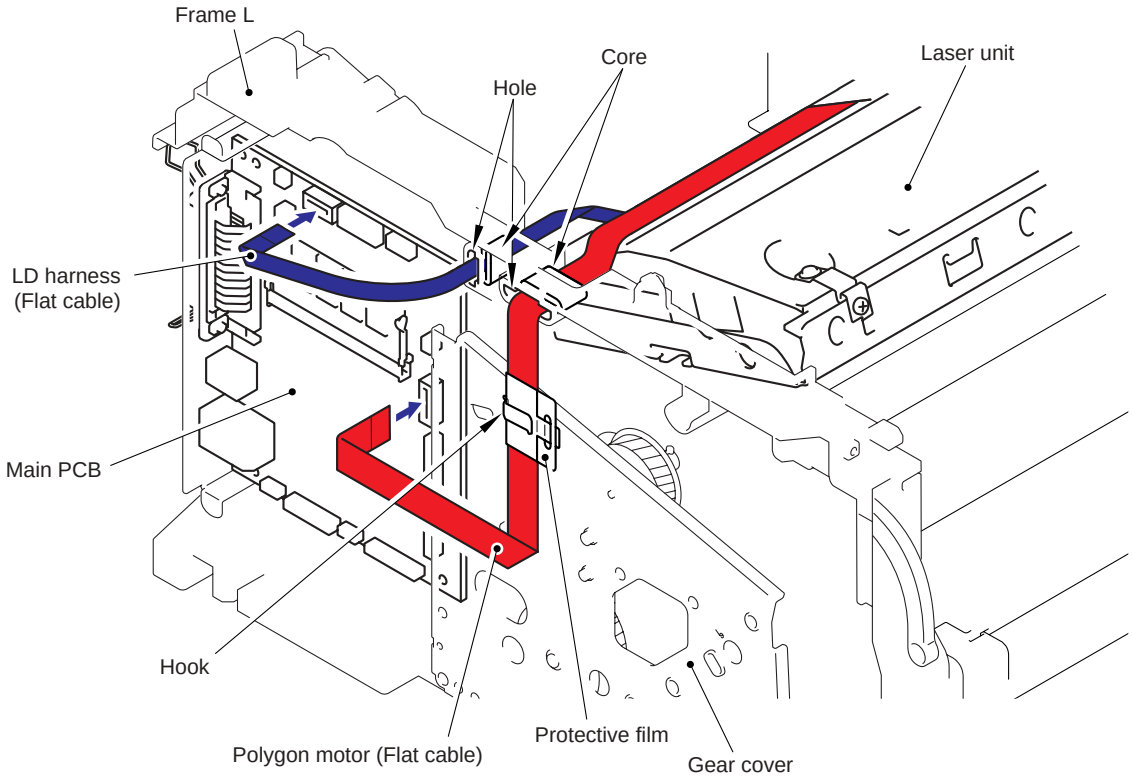

Confidential

10 Fan motor 60 unit

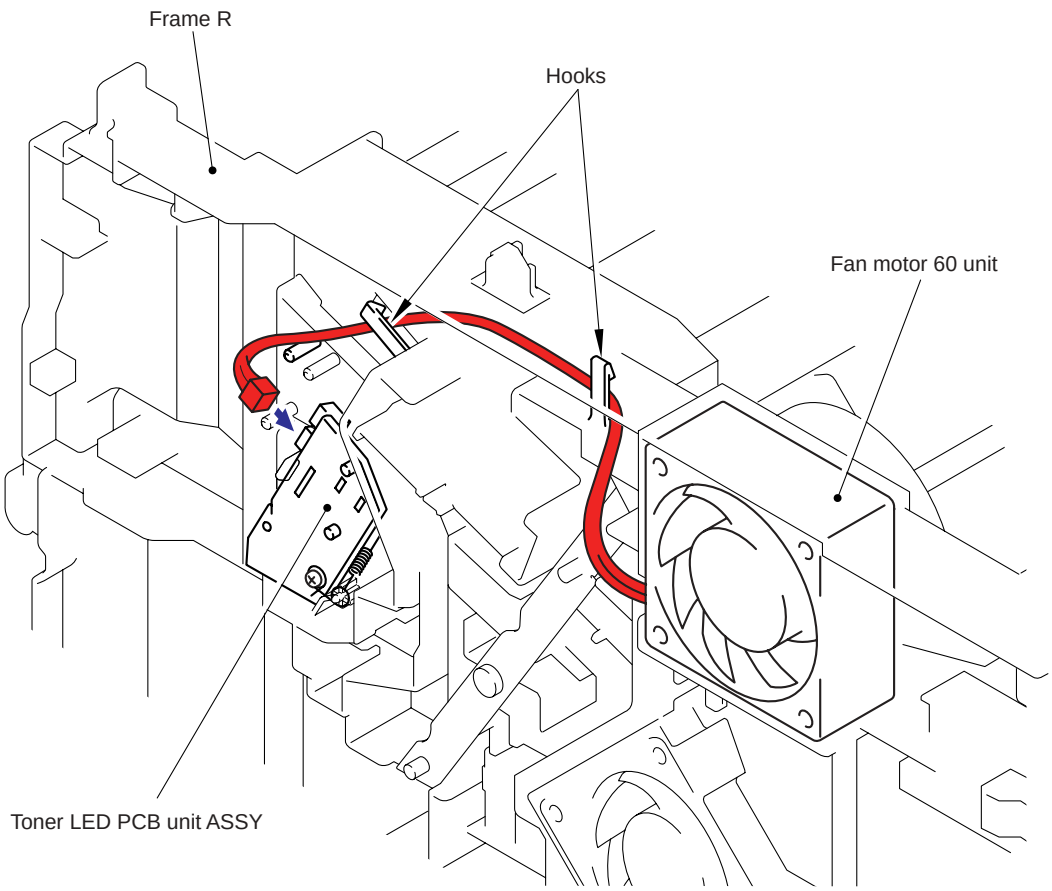

11 Fan motor 60 unit LV

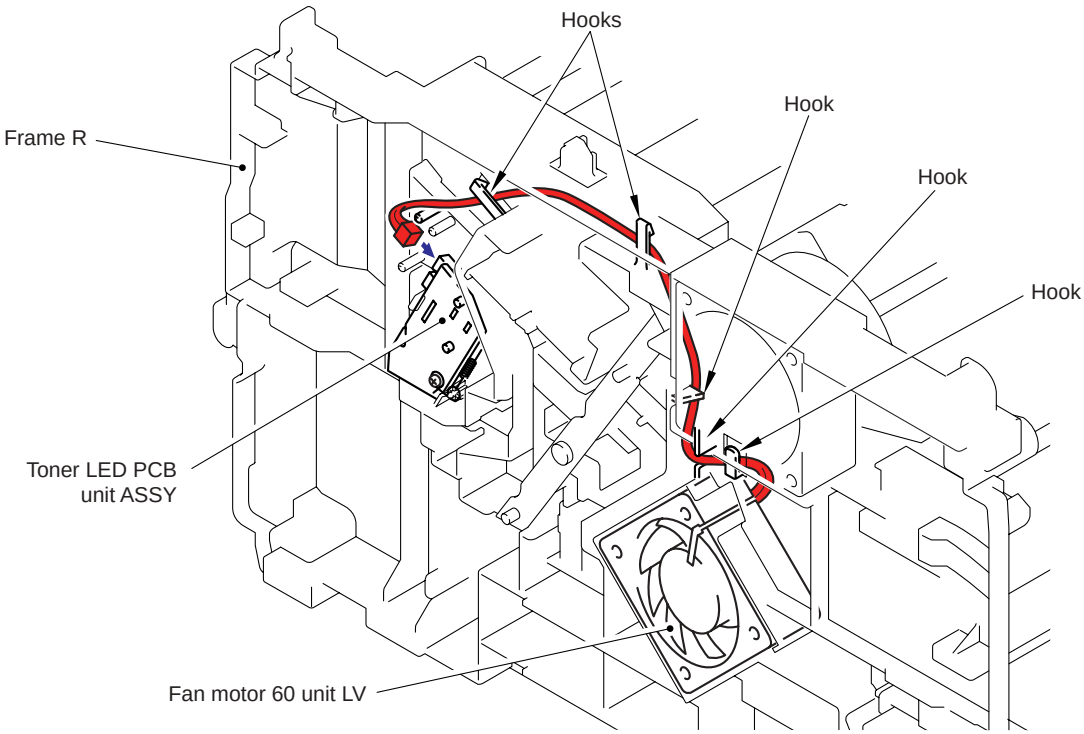

Confidential

12 Toner LED PCB unit ASSY

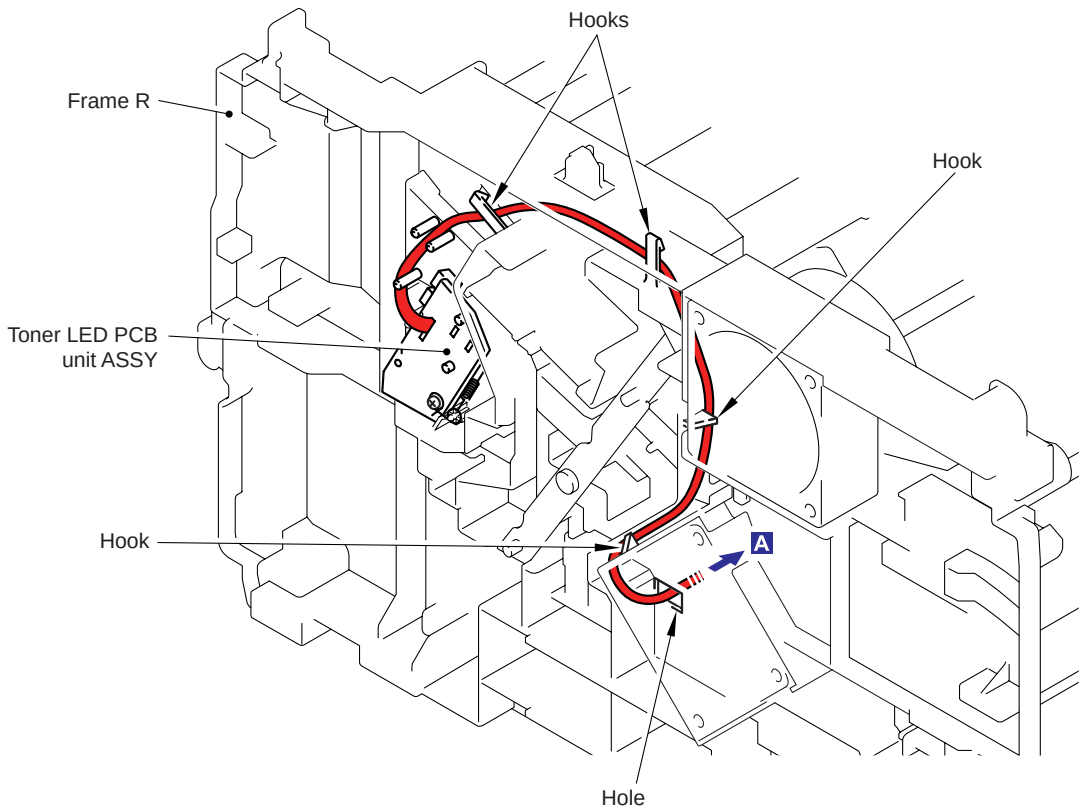

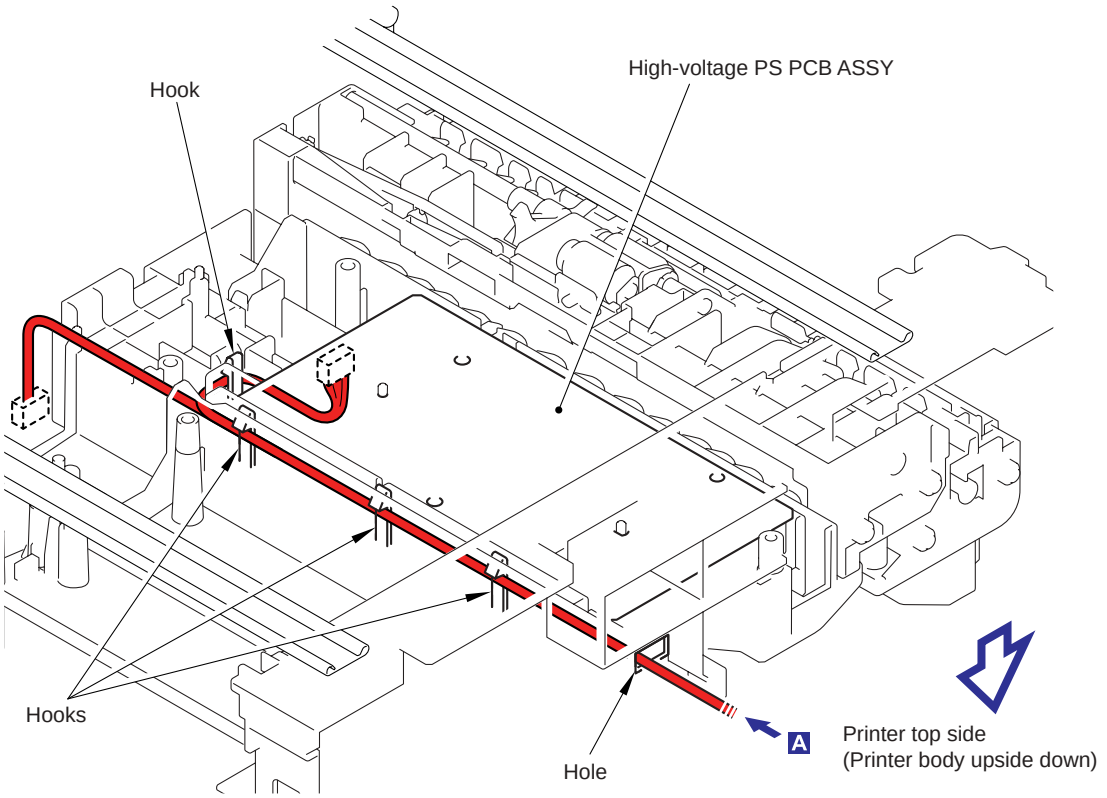

13 LVPS PCB unit

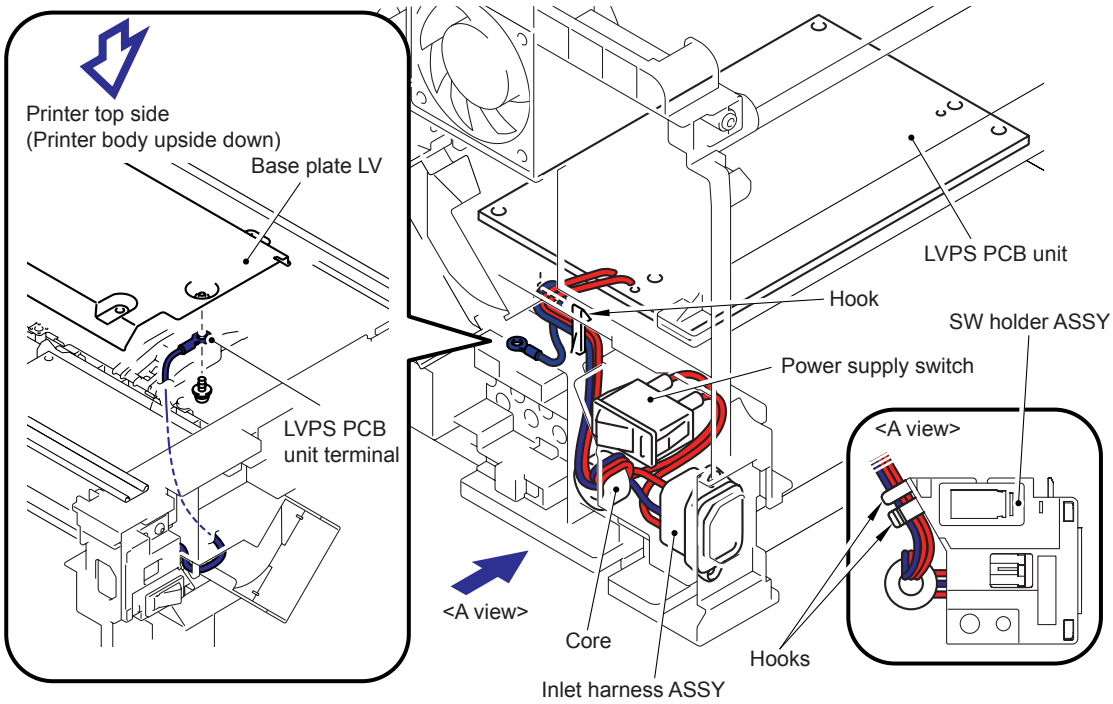

14 FG harness

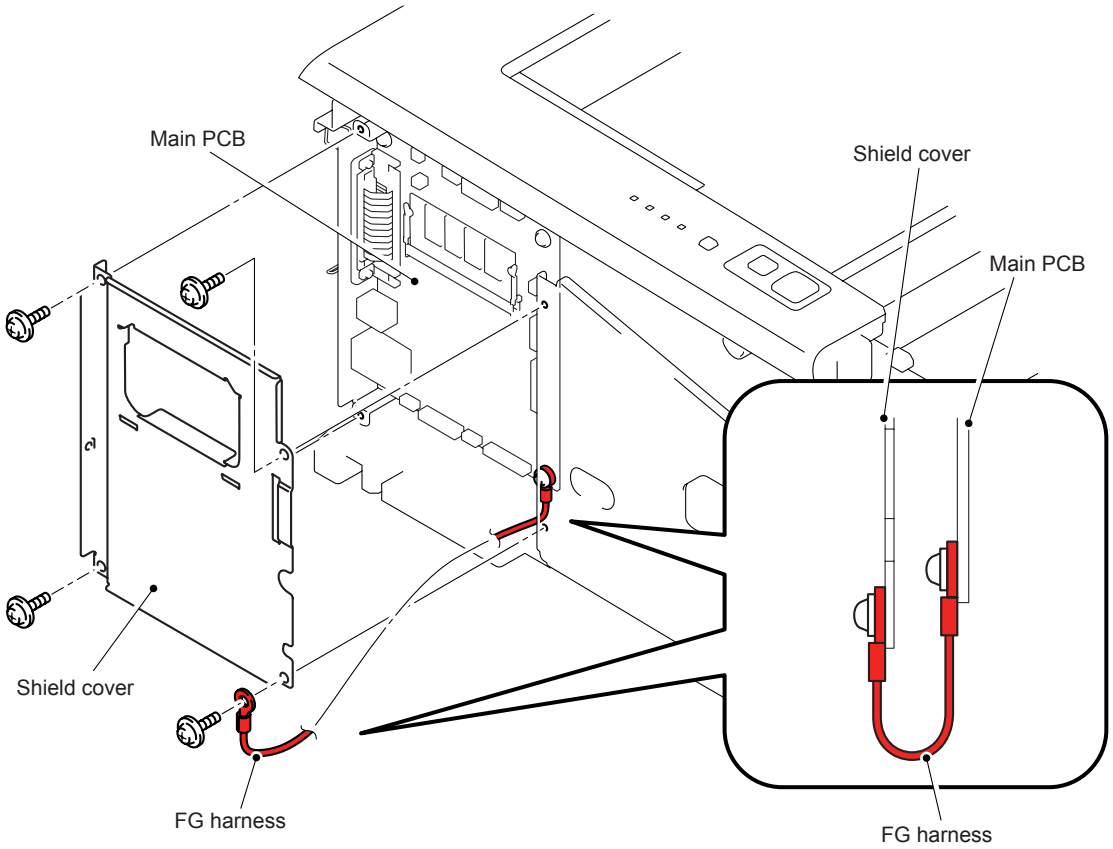

Confidential

15 High-Voltage PS PCB ASSY

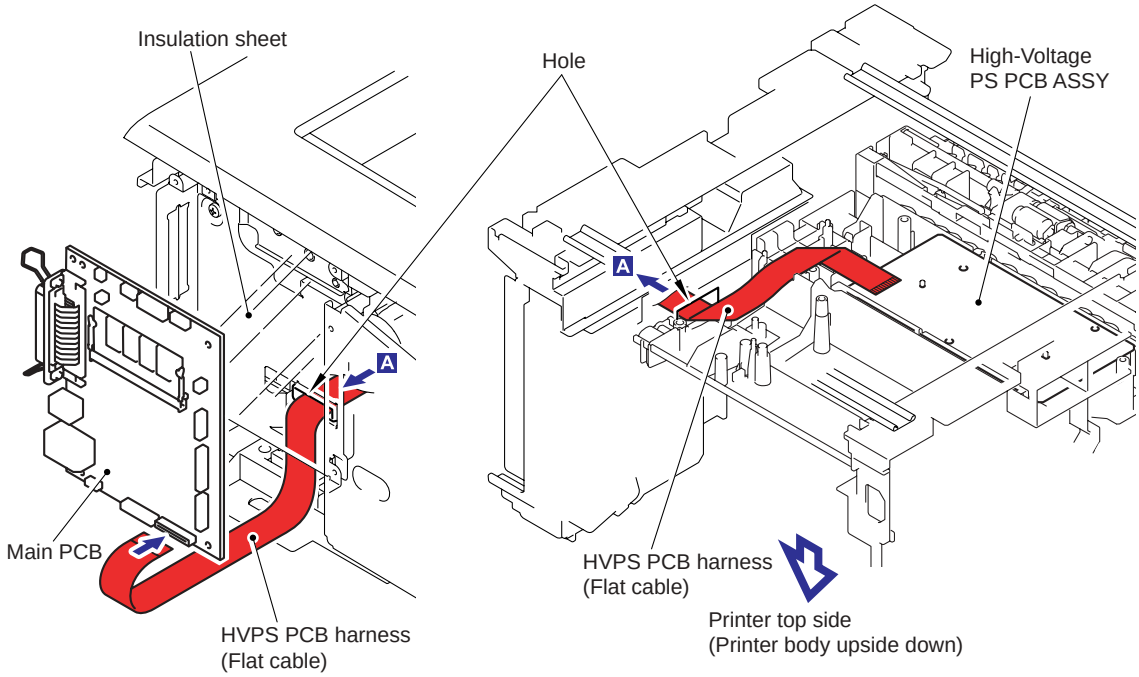

16 Wireless PCB (PCB T60 H989 ASSY 04)

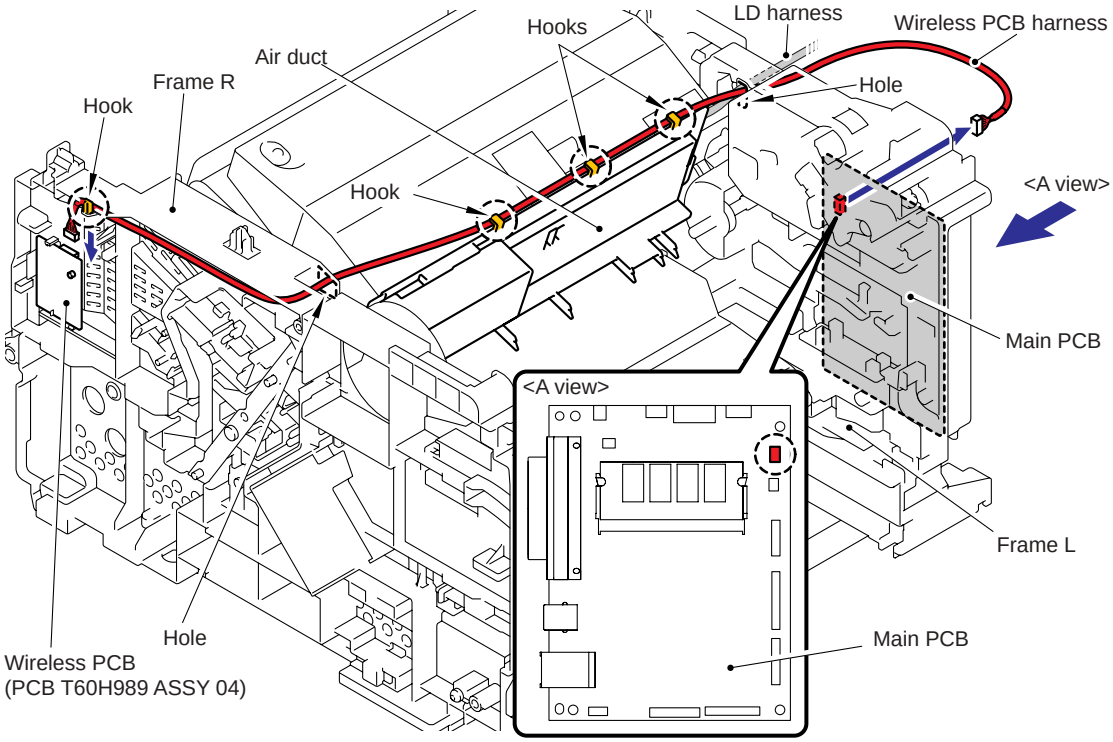

17 Fuser unit

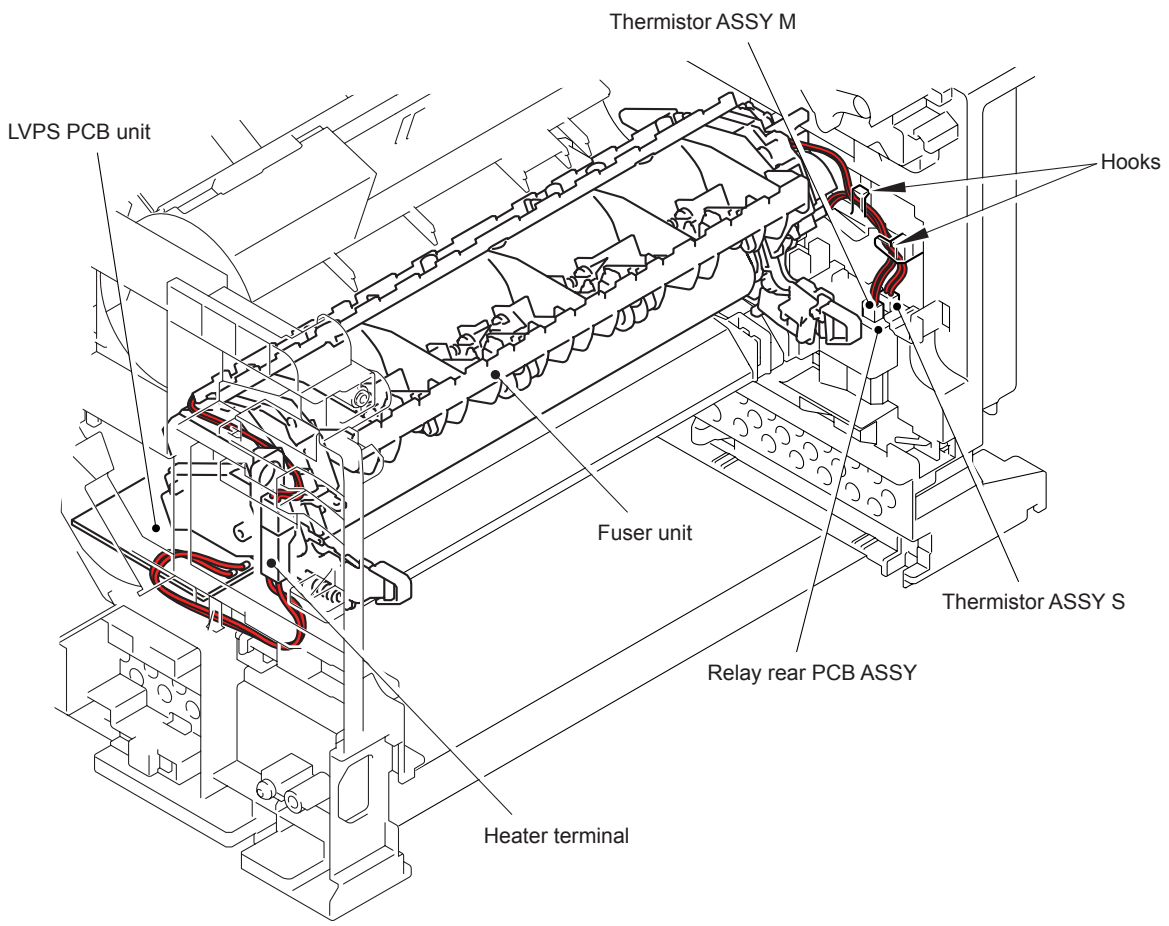

7. DISASSEMBLY FLOW CHART

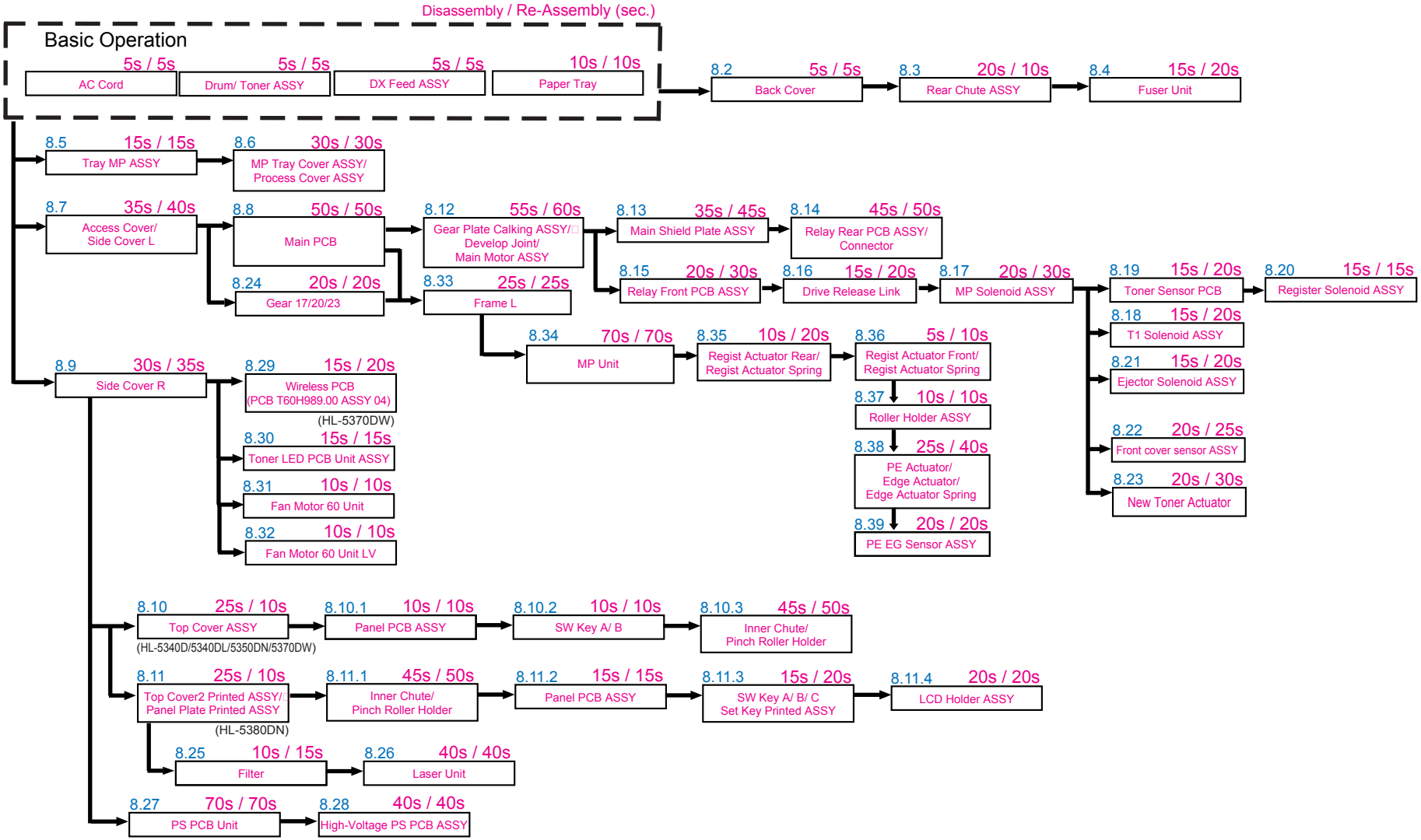

8. DISASSEMBLY PROCEDURE

■ Preparation

Prior to proceeding with the disassembly procedure,

(1) Unplug

- the AC cord,
- the USB cable, if connected,
- the LAN cable, if connected.

(2) Remove

- the Paper tray,
- the Toner cartridge and Drum unit,
- the DX unit.

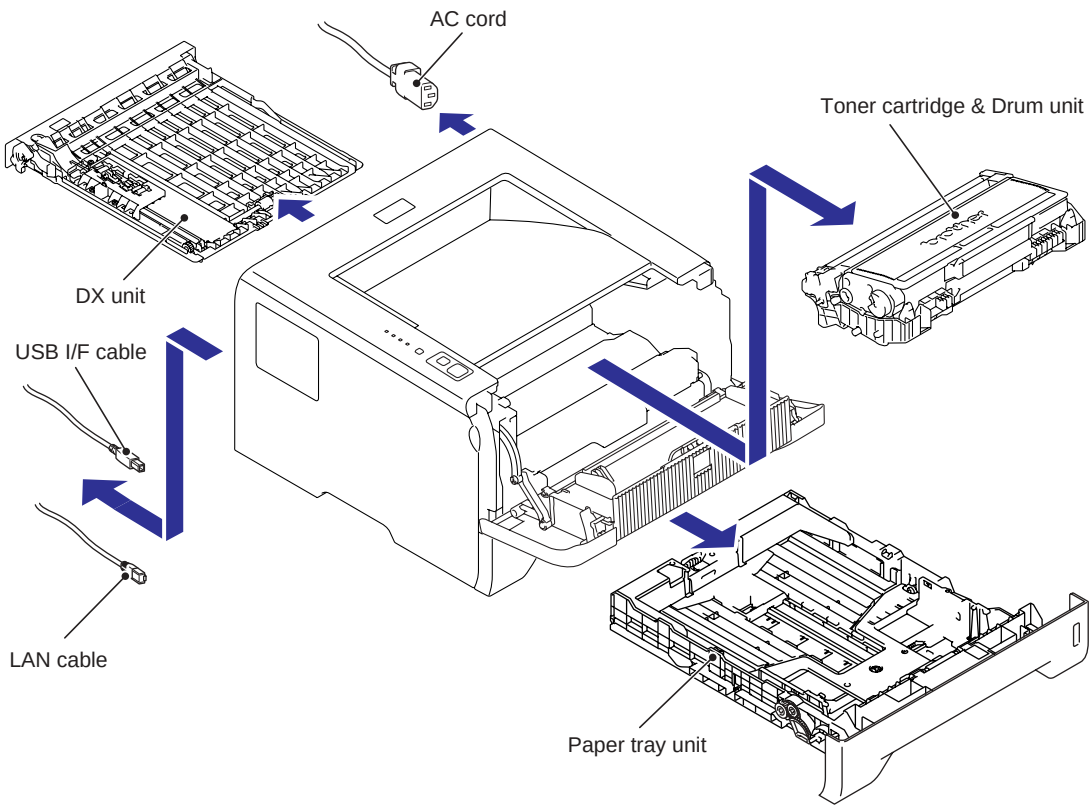

Fig. 5-5

Confidential

8.1 Paper Tray

(1) Pull up the back side of the Separation pad ASSY.

(2) Push the Hooks provided on both sides of the Separation pad ASSY inwards.

(3) Pull up the Separation pad ASSY.

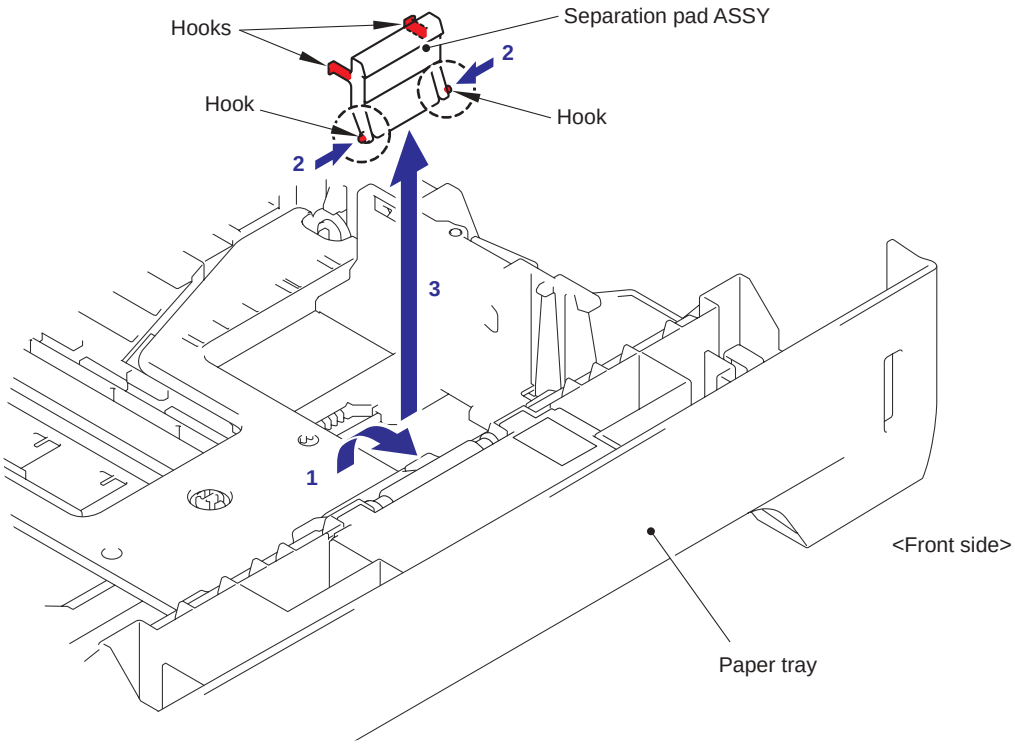

Fig. 5-6

(4) Remove the Separation pad spring.

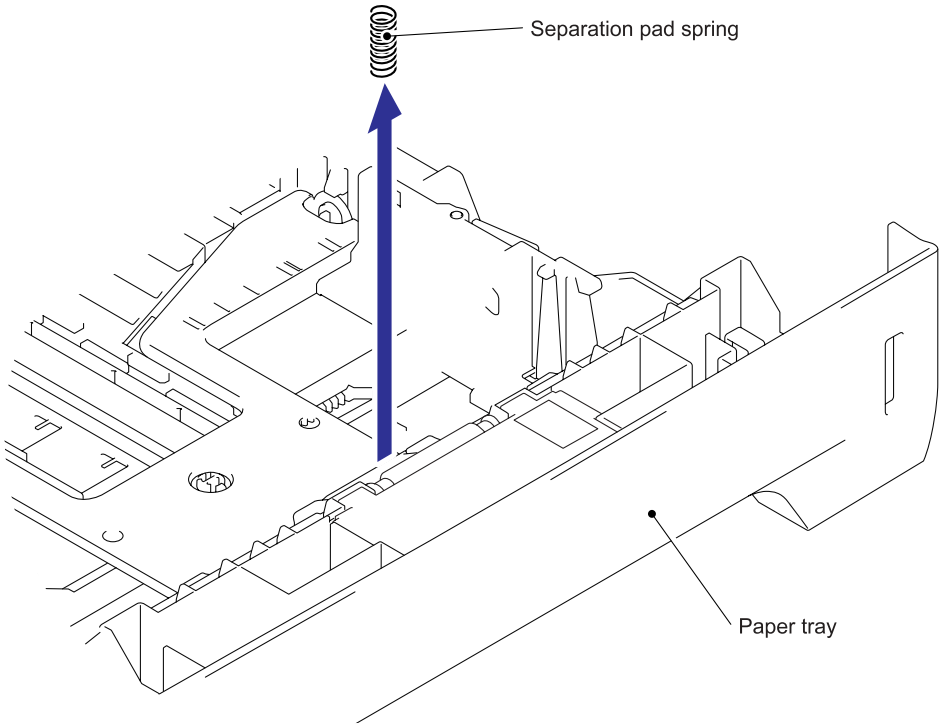

Fig. 5-7

(5) Push the Hook of the lift gear 46 while pushing up the plate up plate, and remove the Lift gear 46.

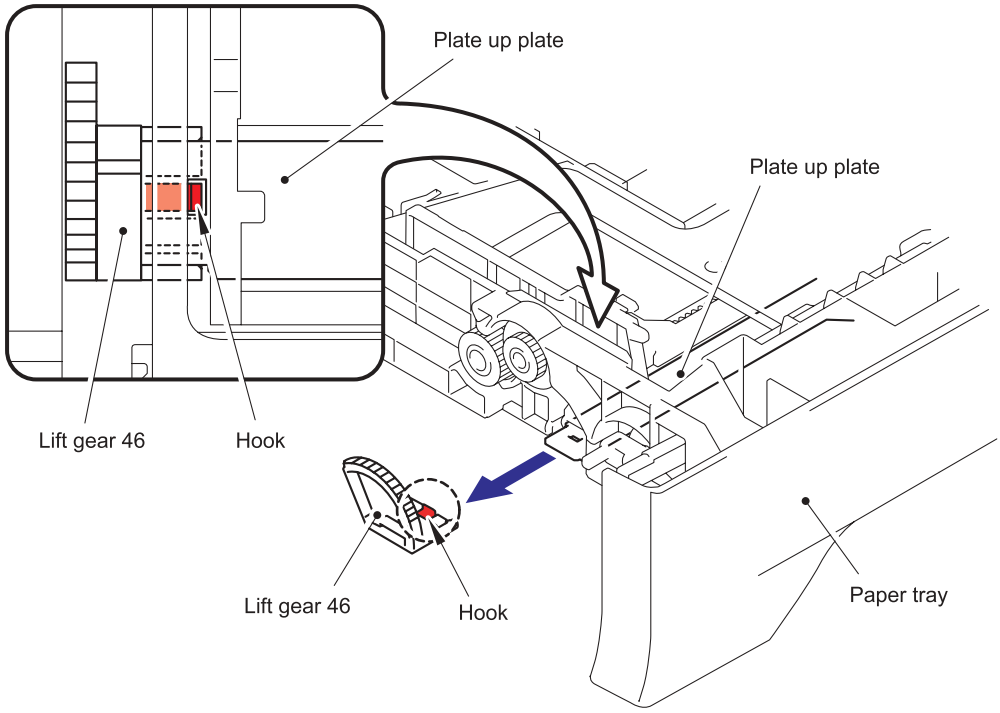

Fig. 5-8

Confidential

(6) Remove the Gear 21-16.

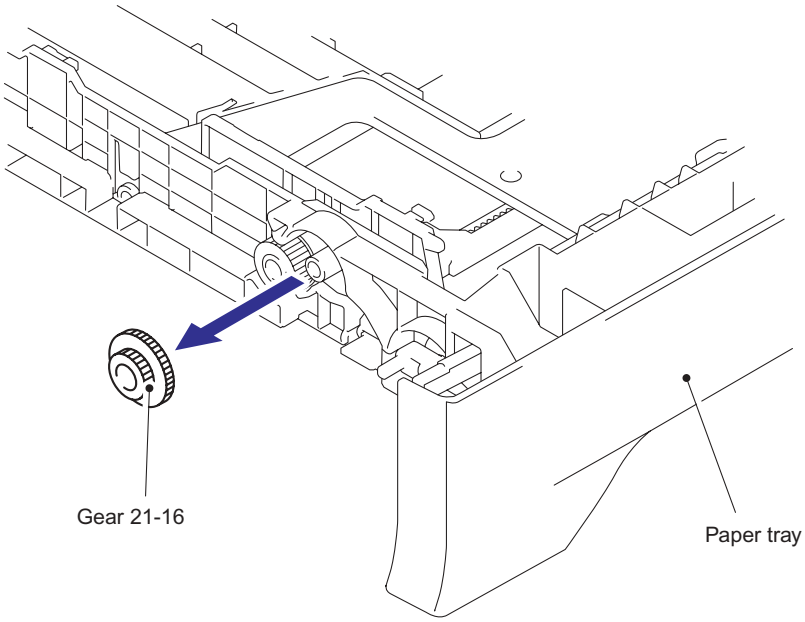

Fig. 5-9

(7) Remove the Gear 15.

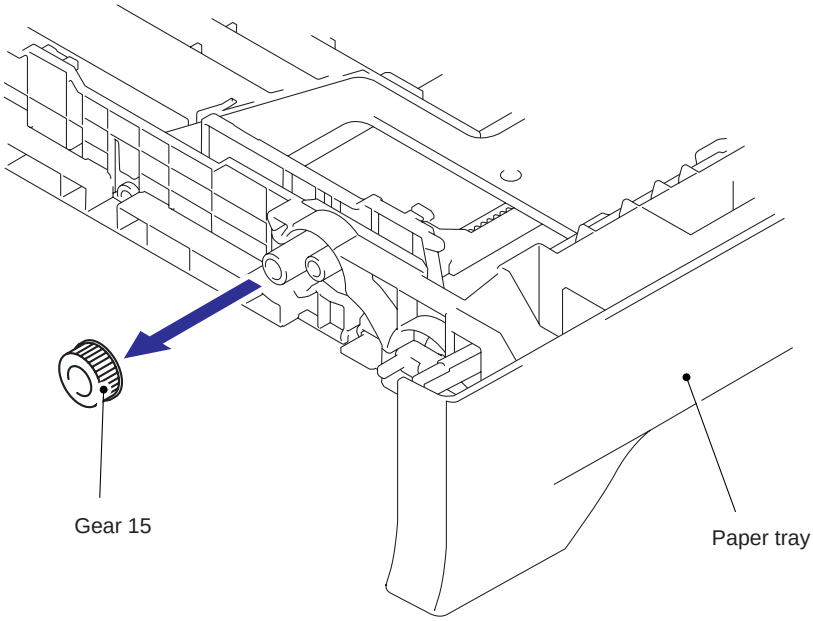

Fig. 5-10

Confidential

8.2 Back Cover

(1) Open the Back cover.

(2) Remove the Arm of the Back cover from the Pin.

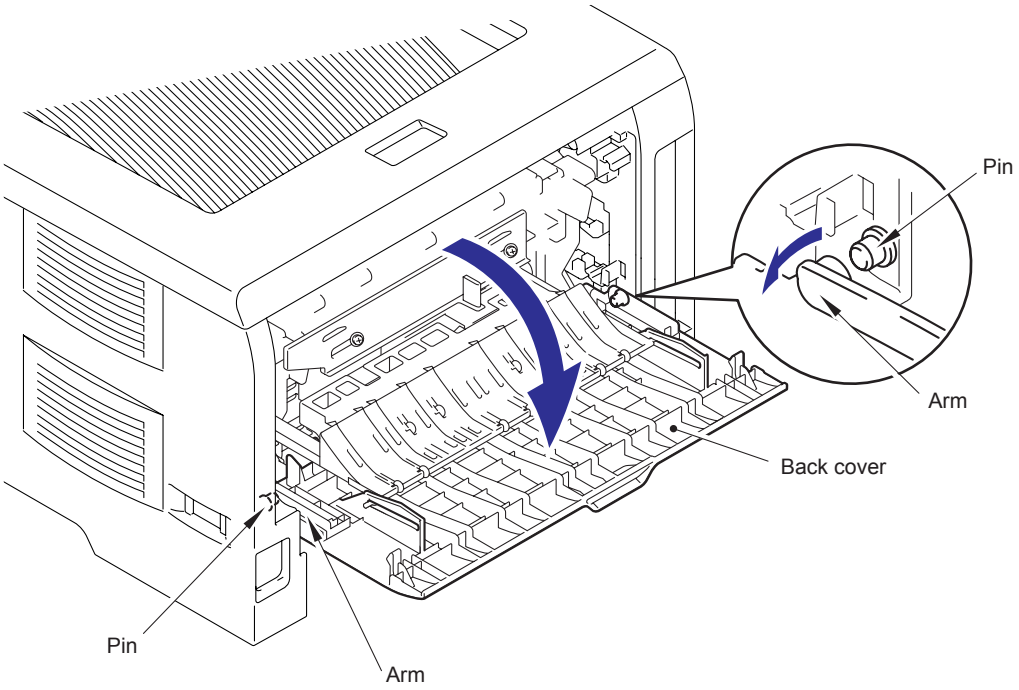

Fig. 5-11

Confidential

(3) Remove the Pins of the Outer chute from the Back cover.

(4) Remove the Back cover.

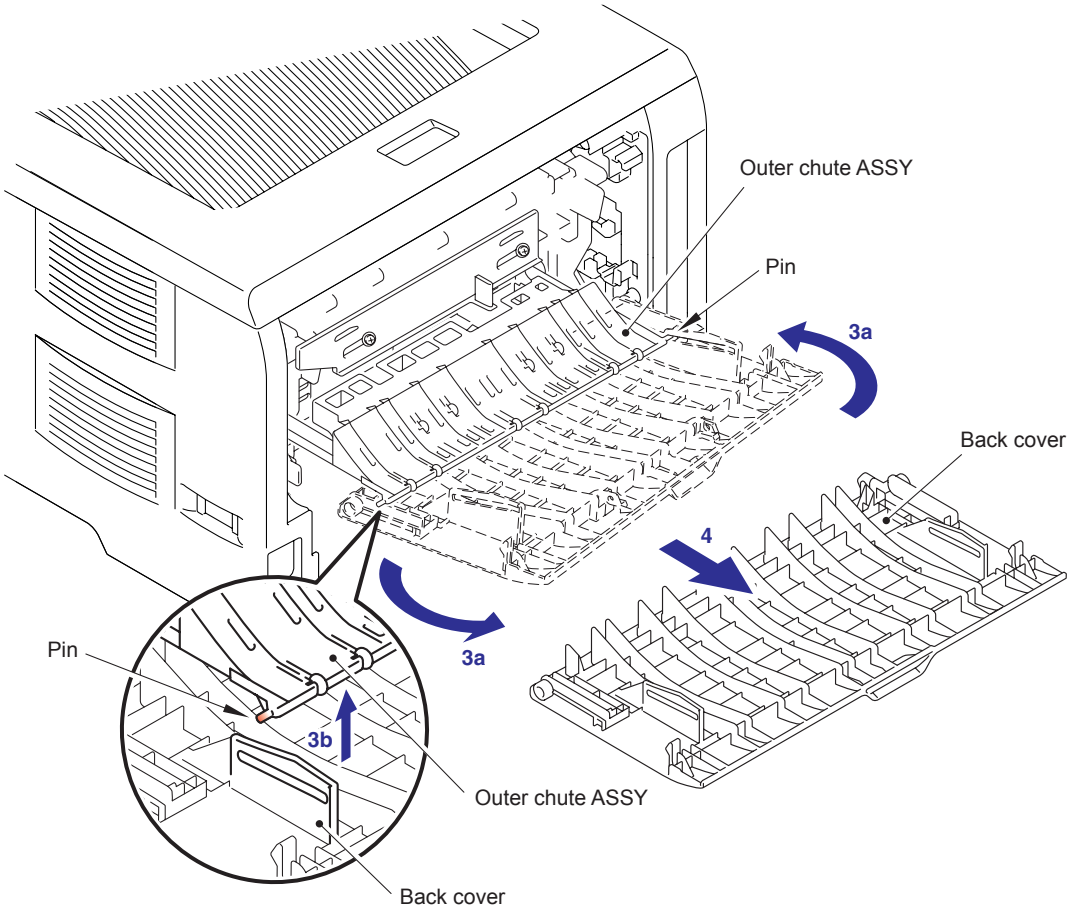

Fig. 5-12

8.3 Rear Chute ASSY

(1) Hold the Knobs on the Rear chute ASSY and pull down this to your side.

(2) Remove the Arms of the Rear chute ASSY from the Pins.

(3) Remove the Rear chute ASSY.

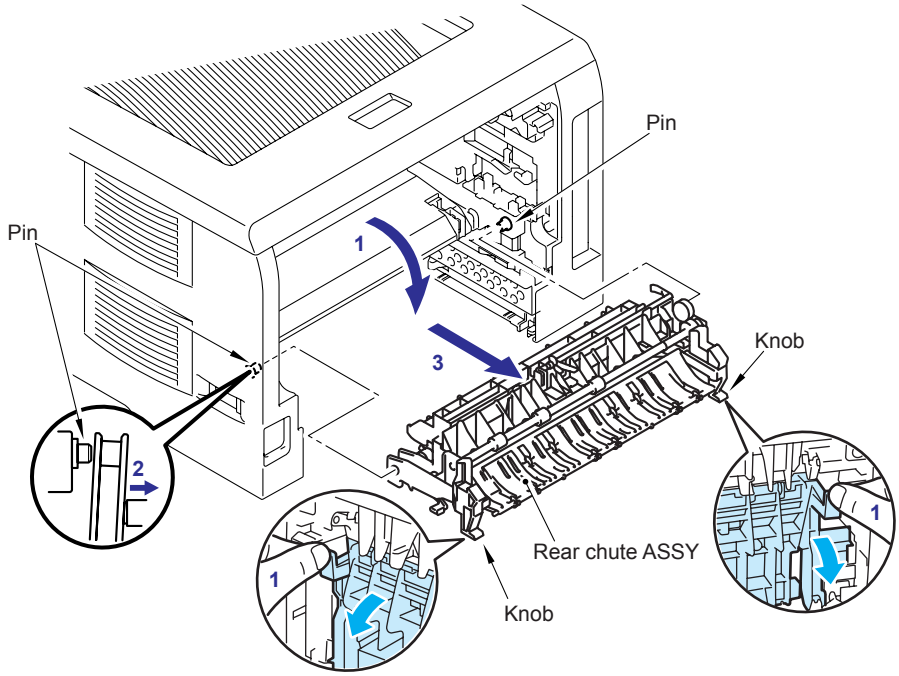

Fig. 5-13

(4) Remove the Arm of the Outer chute from the Pin of the Rear chute, and remove the Outer chute.

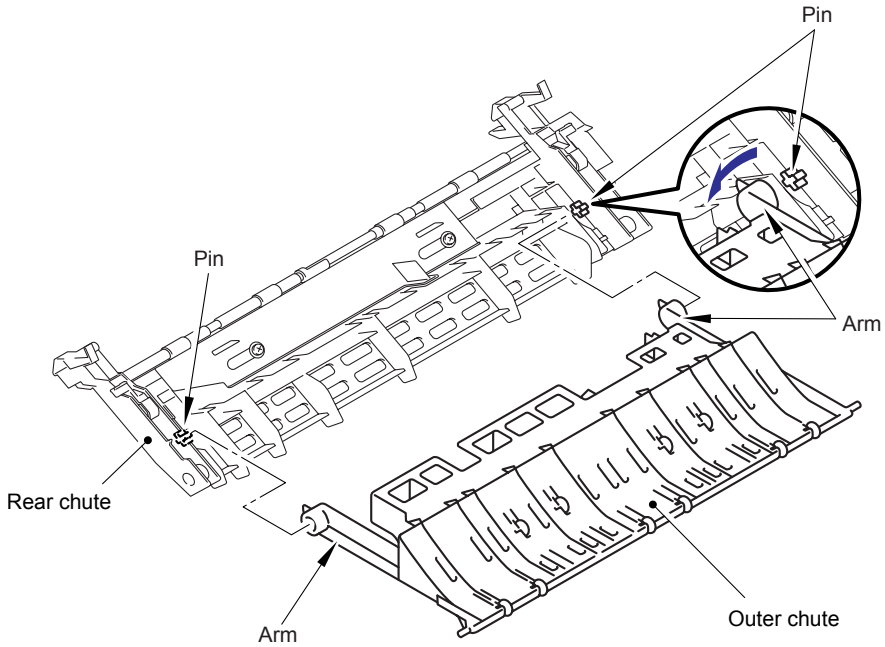

Fig. 5-14

Confidential

(5) Push the Hook of the Rear chute (indicated by the arrow 5a), and move the Eject actuator to the direction of 5b.

(6) Lift up the Eject actuator to remove.

(7) Remove the Eject actuator spring.

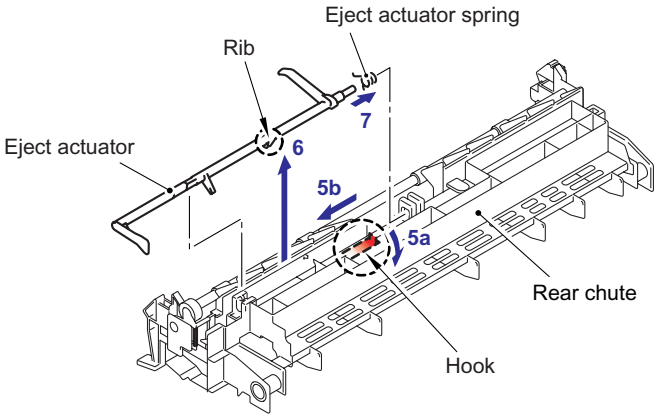

Fig. 5-15

Assembling Note:

- When assembling the Eject actuator spring, ensure that its direction is correct referring to the figure below.

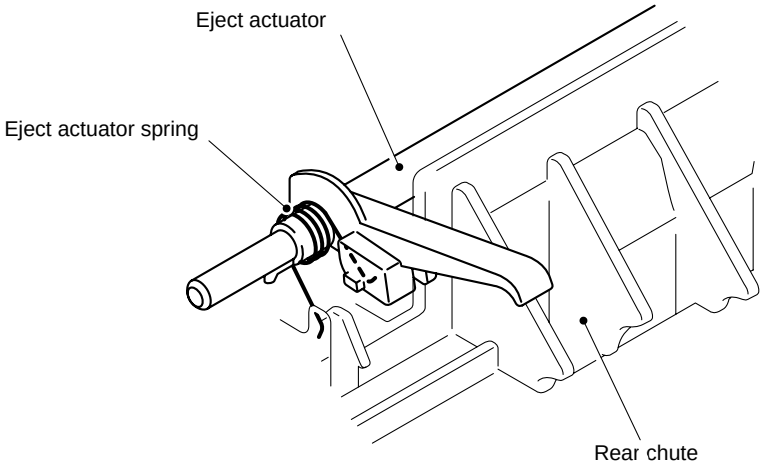

Fig. 5-16

Confidential

8.4 Fuser Unit

(1) Remove the pan B M4x20 Taptite screw. Release the Hooks in the order of 1a, 1b and 1c. Remove the FU harness cover 1.

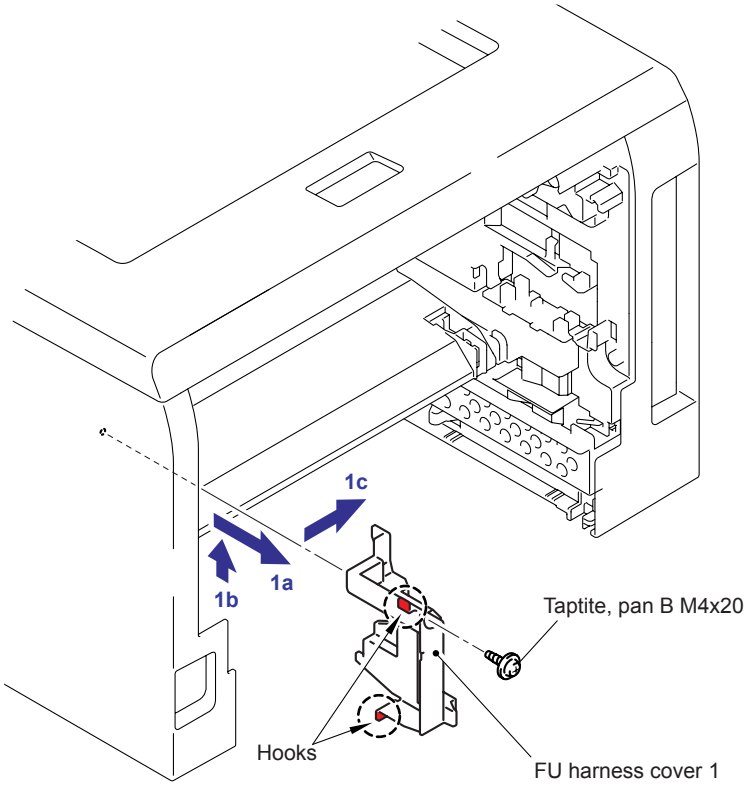

Fig. 5-17

(2) Disconnect the connector of the Heater terminal while pressing the Hook of the connector of the Fuser unit.

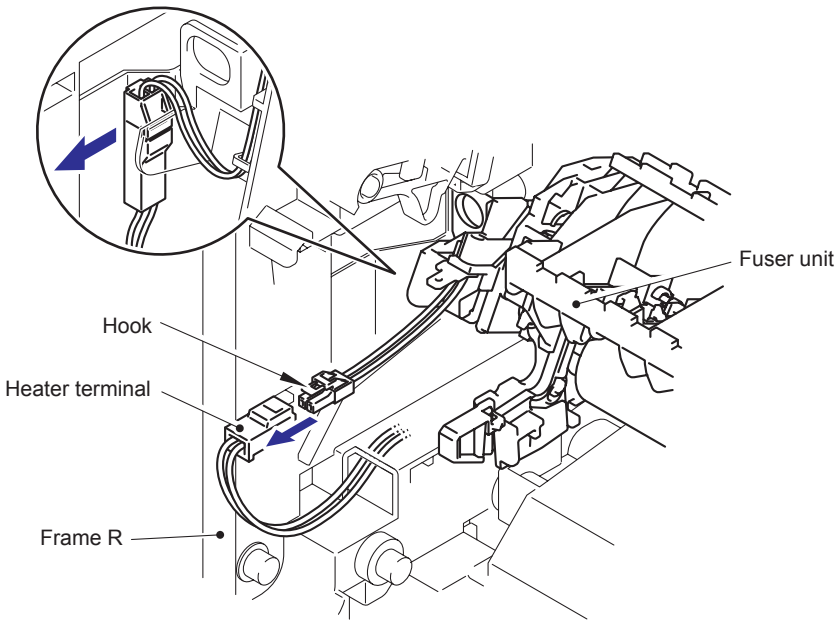

Fig. 5-18

Confidential

(3) Pull the FU harness cover 2 to the direction of 3a while pressing the hook and pull out the FU harness cover 2 at the back.

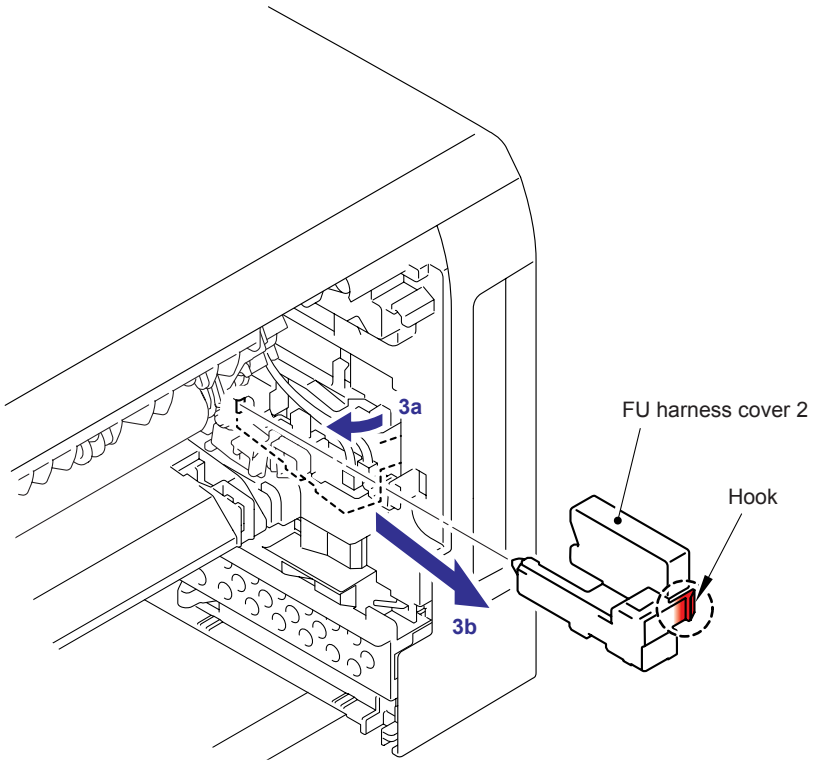

Fig. 5-19

(4) Disconnect the connectors of the Thermistor ASSY M and Thermistor ASSY S from the Relay rear PCB ASSY, and remove the harnesses of these thermistors.

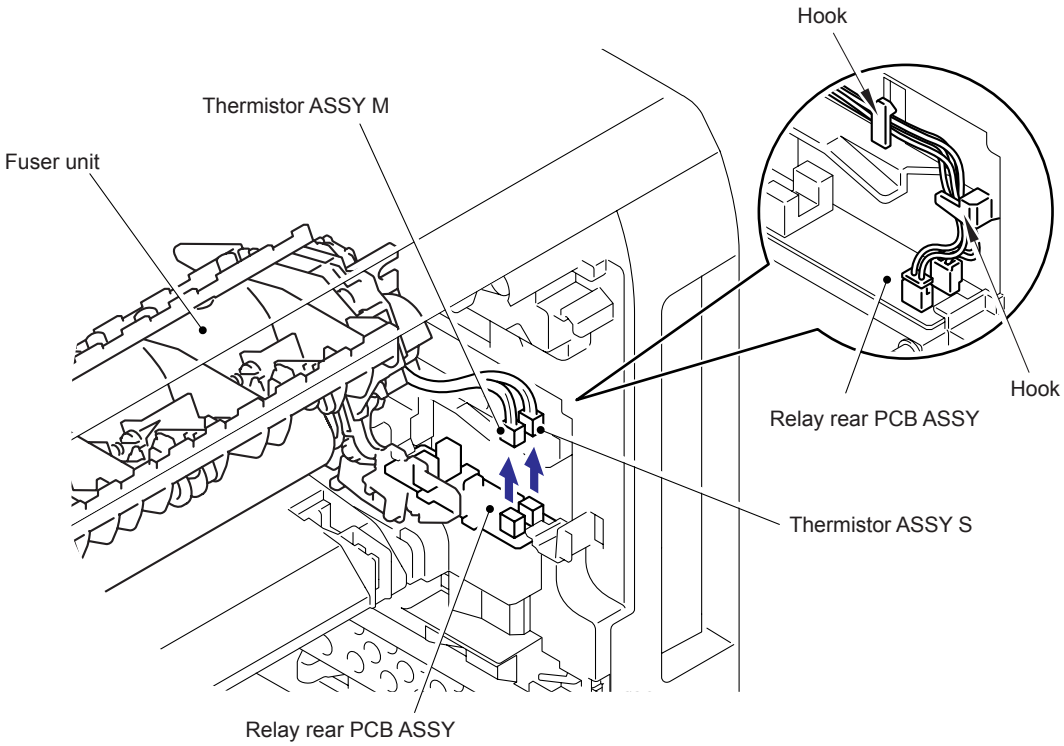

Fig. 5-20

Confidential

CAUTION

- DO NOT subject the fuser unit to strong physical shocks or vibrations.
- DO NOT touch the rollers and the electrodes to prevent damage to the fuser unit In the following figures.

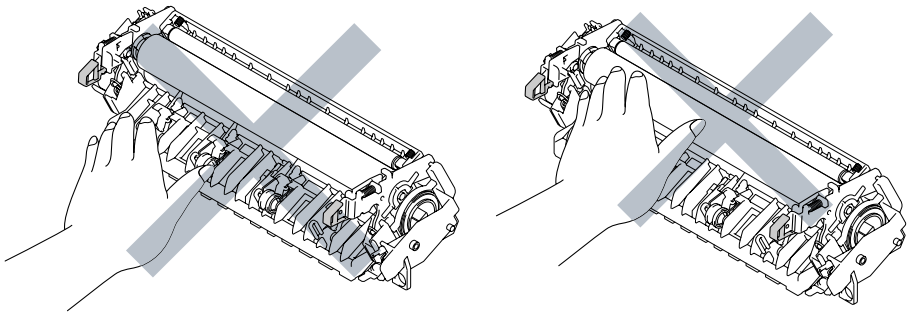

(5) Remove the pan B M4x20 Taptite screw, and then remove Fuser unit.

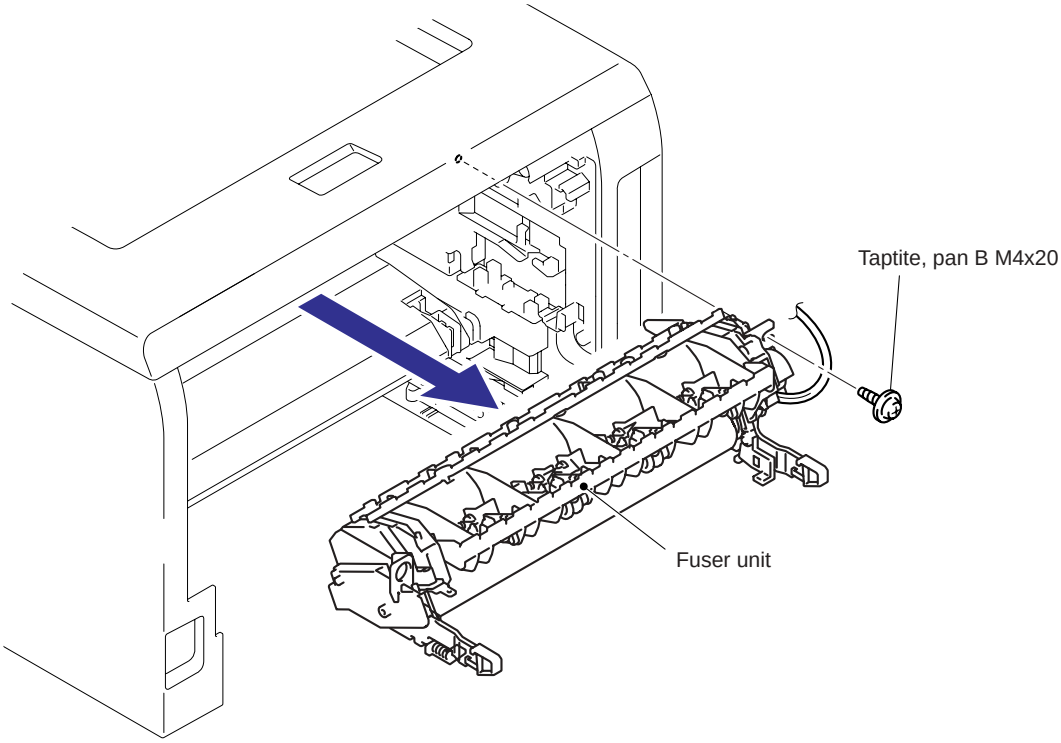

Fig. 5-21

Confidential

Assembling Note:

- To prevent the deformation of the pressure roller, the fuser unit spare part is shipped with its pressure roller at low nip pressure. Before installing the fuser unit, turn back the levers to the normal position by following instructions below.

(1) Put the fuser unit on a flat, horizontal surface. Pull up each of the black tab (a) on the right side and left side.

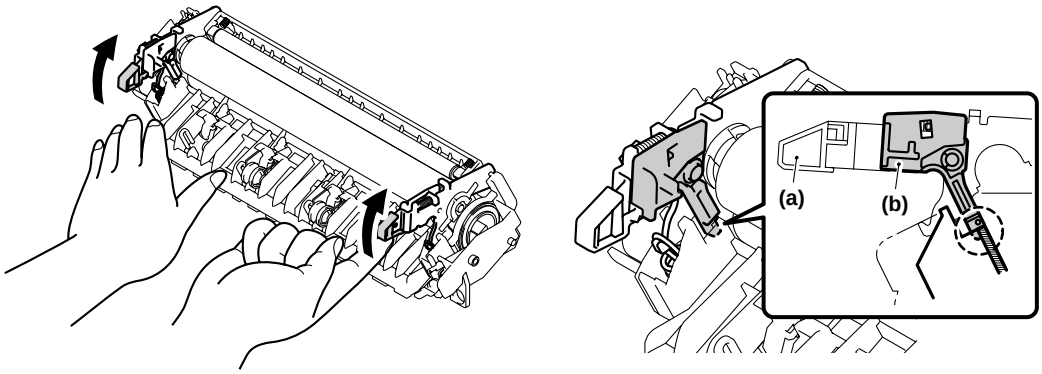

Fig. 5-22

(2) Make sure that the black lever (b) is in the position in the illustration below.

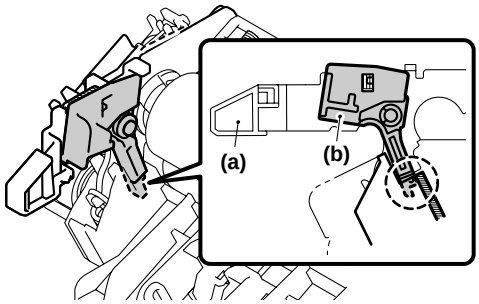

Fig. 5-23

8.5 Tray MP ASSY

(1) Open the MP tray cover ASSY.

(2) Release the Pins of the Tray MP ASSY from the MP tray cover ASSY.

(3) Remove the Tray MP ASSY.

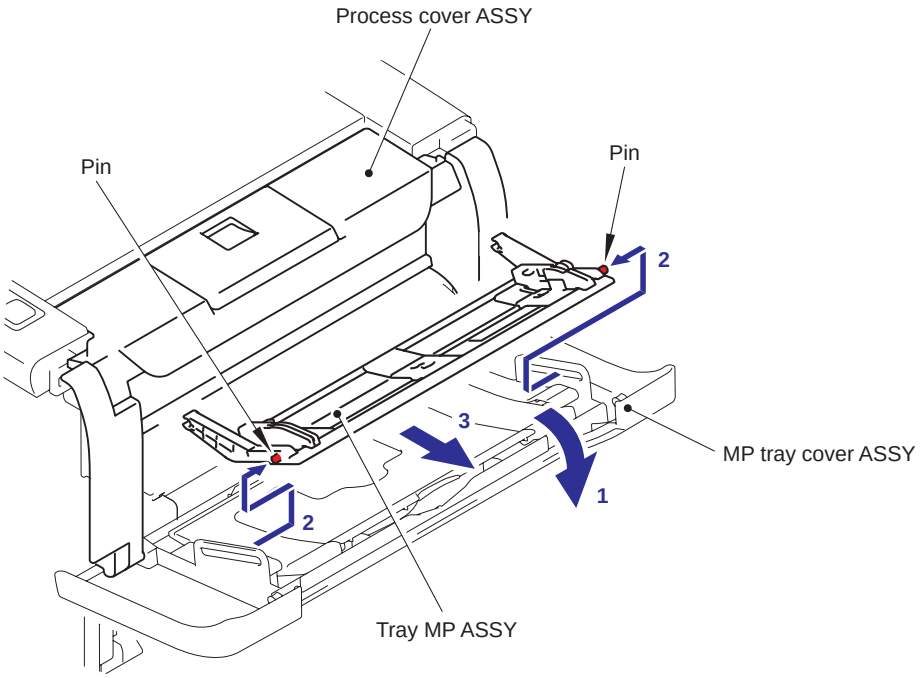

Fig. 5-24

Confidential

8.6 MP Tray Cover ASSY/Process Cover ASSY/Emblem cover

(1) Push the front cover release button.

(2) Open Process cover ASSY.

(3) Release the Hook to remove the Process cover stopper.

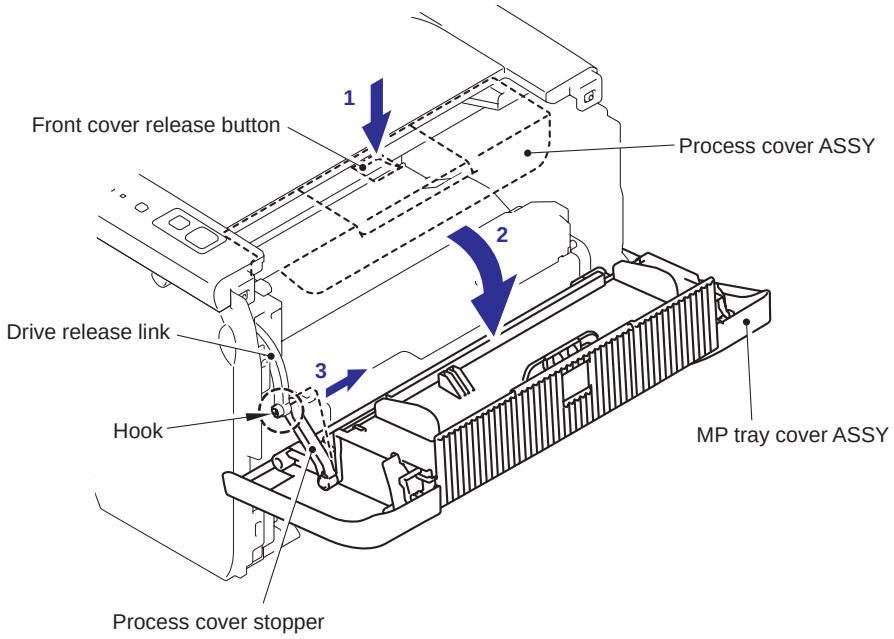

Fig. 5-25

(4) Remove the MP tray cover ASSY and the Process cover ASSY to the direction of 4a and 4b to release the Pins, and remove them.

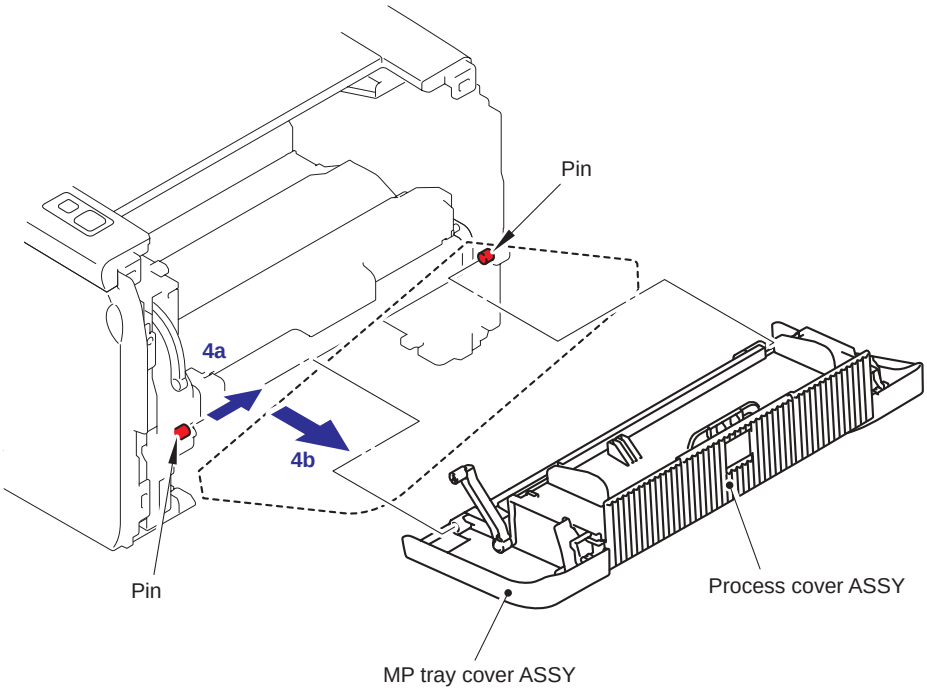

Fig. 5-26

Confidential

(5) Pull the Arm outwards and remove the Process cover ASSY from the MP tray cover ASSY.

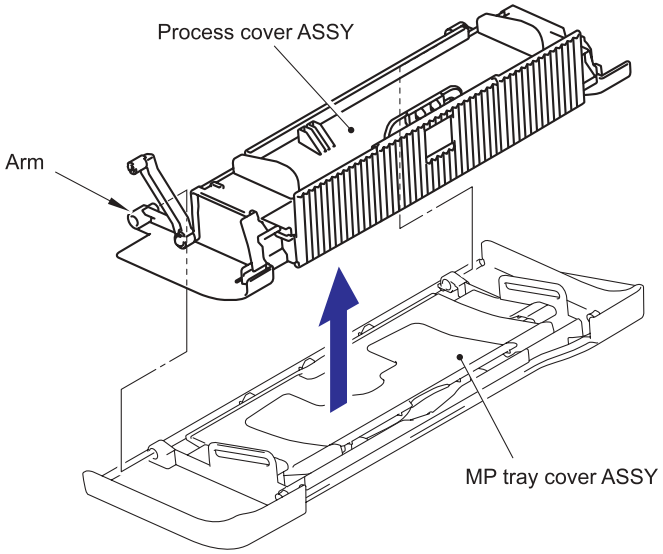

Fig. 5-27

(6) Remove the cup B M4x10 Taptite screw, and then remove the Process cover stopper.

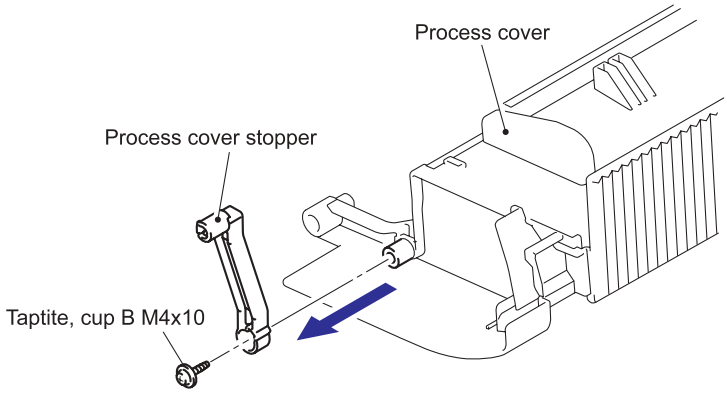

Fig. 5-28

(7) Remove the Support flap 1 from the Process cover.

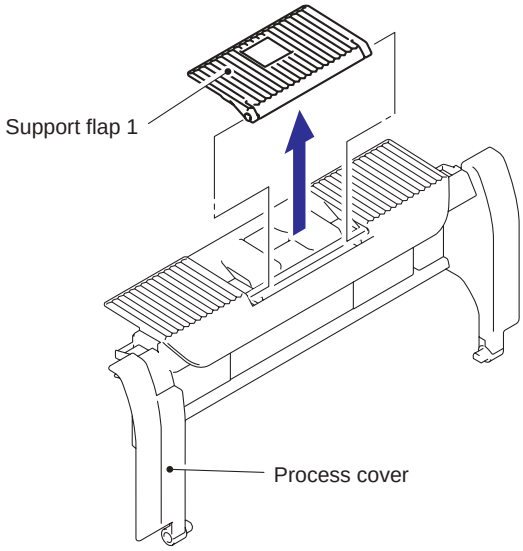

Fig. 5-29

Confidential

(8) Release the Hook of the right side, and then remove the MP tray extention from the MP tray cover ASSY.

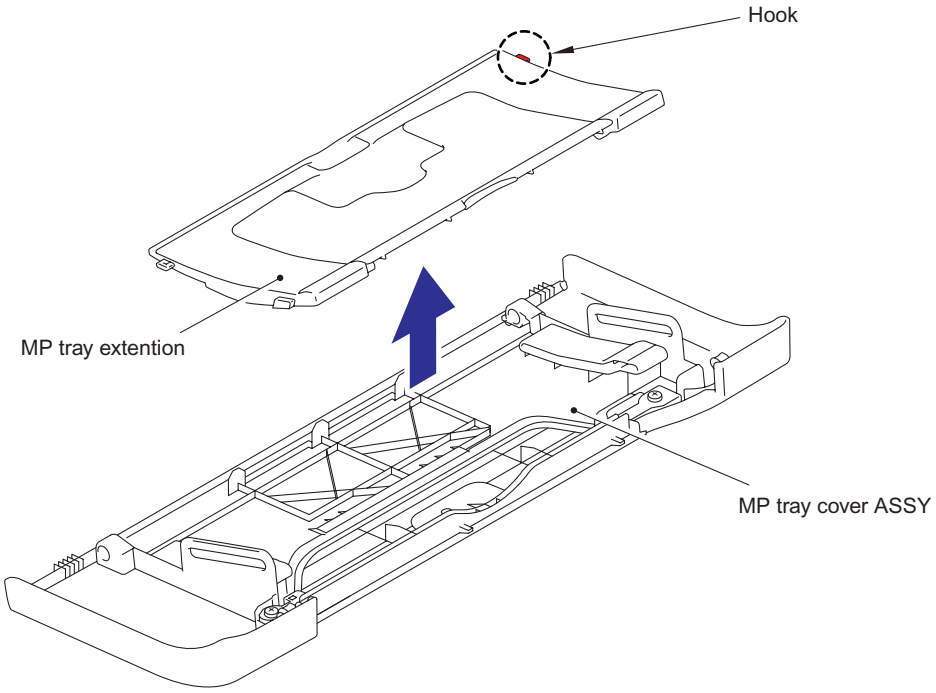

Fig. 5-30

(9) Remove the two cup B M3x10 Taptite screws, and then remove the Emblem cover from the MP tray cover.

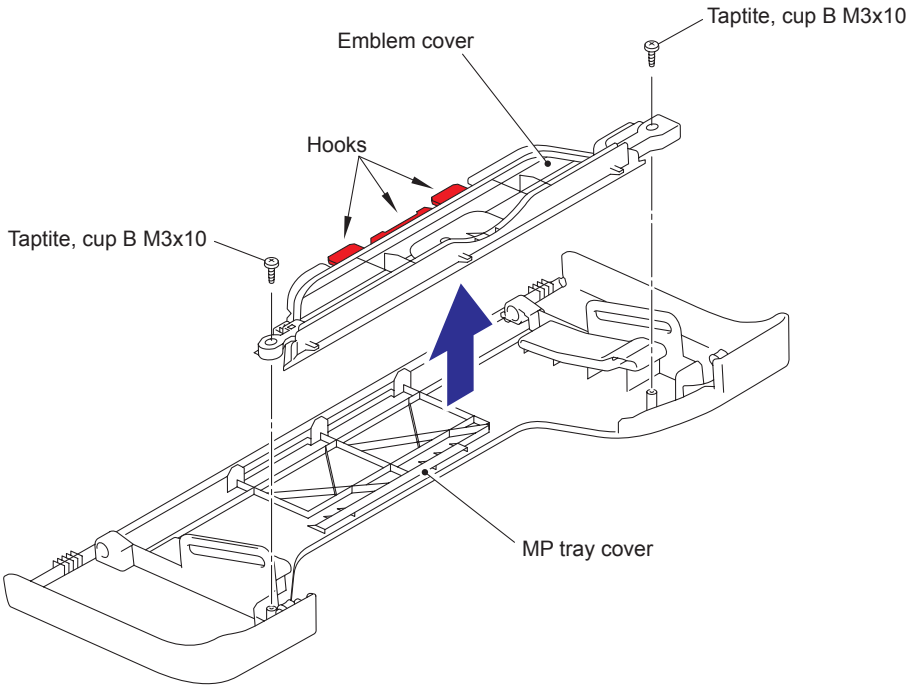

Fig. 5-31

Confidential

8.7 Access Cover/Side Cover L

(1) Remove the Access cover.

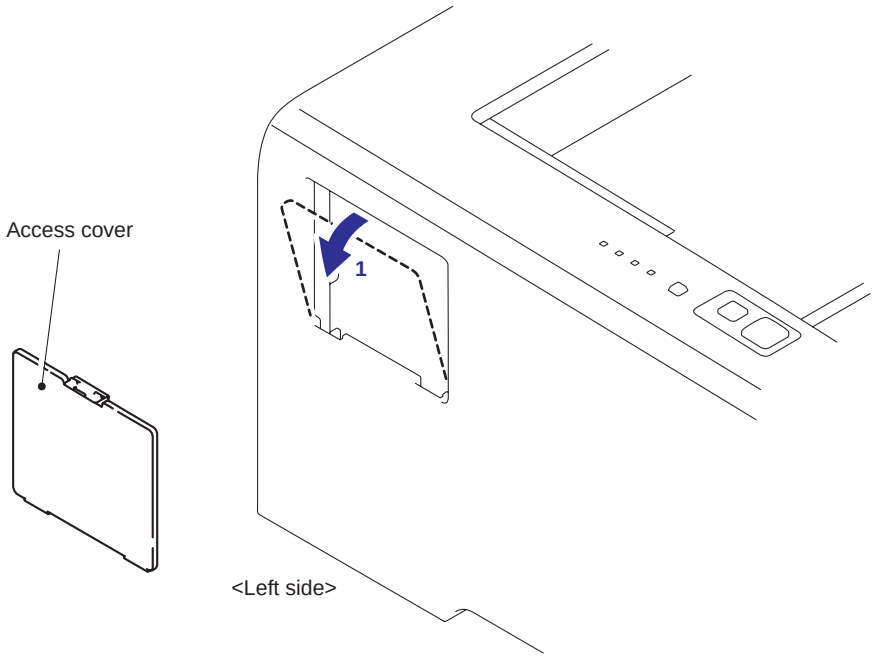

Fig. 5-32

(2) Remove the two bind B M4x12 Taptite screws, and then remove the Side cover L by releasing the Hooks from 2a to 2d.

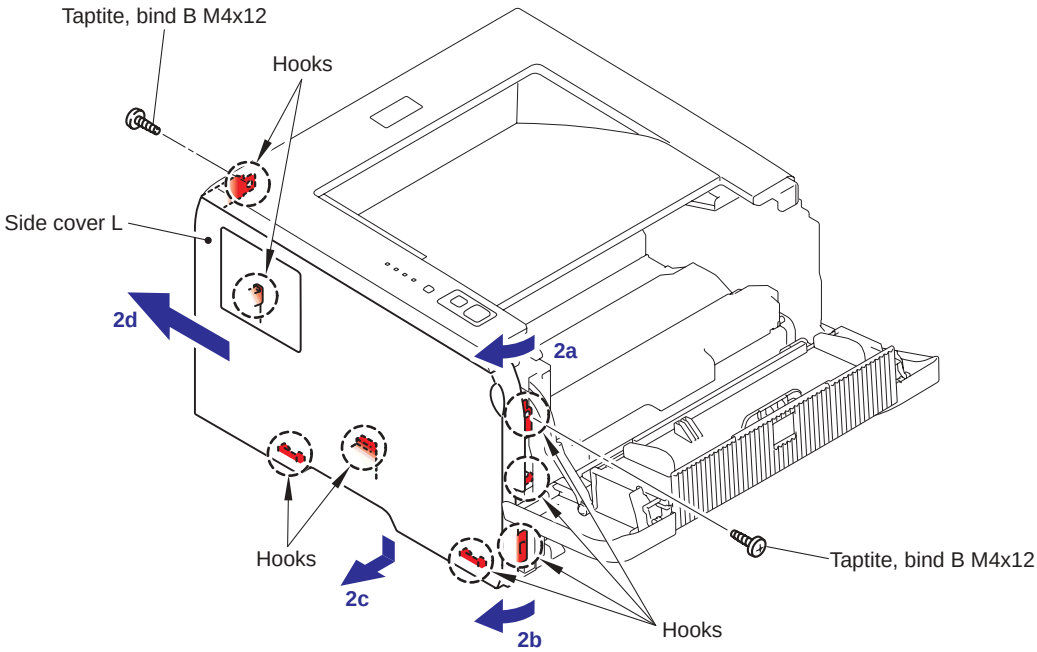

Fig. 5-33

Confidential

8.8 Main PCB

(1) Remove the four cup S M3x6 SR Taptite screws, remove the FG harness and then remove the Shield cover.

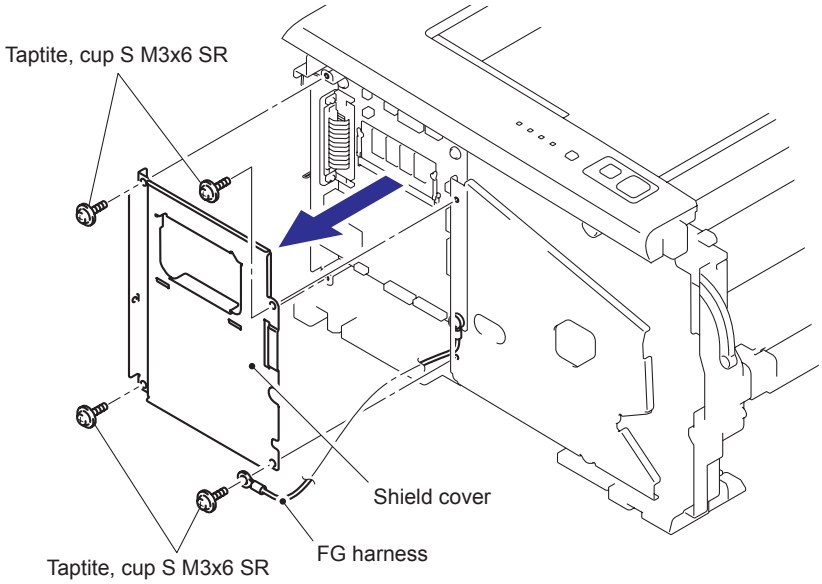

Fig. 5-34

(2) Disconnect the five or six connectors and six flat cables from the Main PCB.

Note:
- After disconnecting the flat cable(s), check that each cable is not damaged at its end or short-circuited.
- When connecting the flat cable(s), do not insert it at an angle. After insertion, check that the cable is not at an angle.

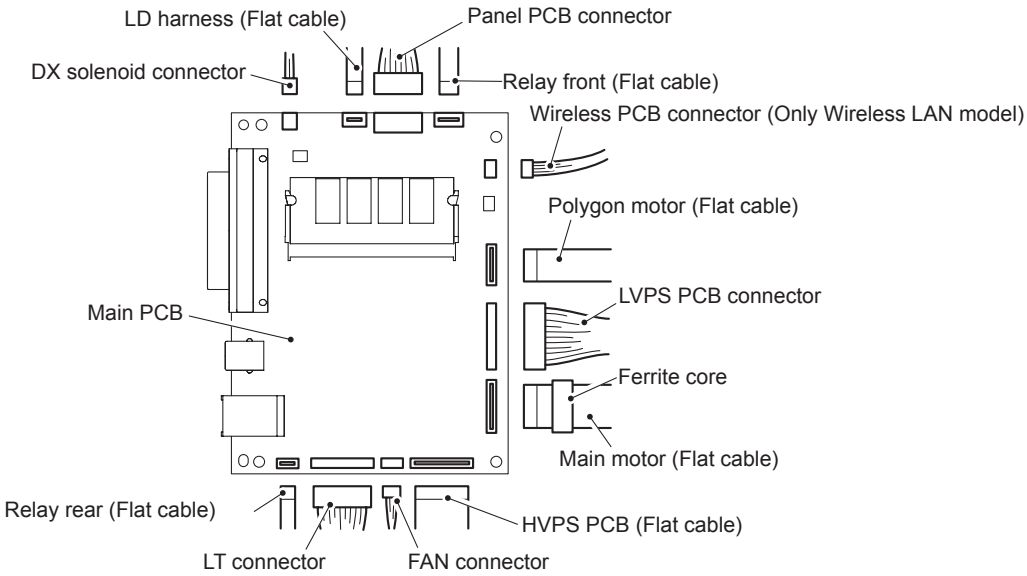

Fig. 5-35

Assembling Note:
- When assembling the Main PCB, ensure to place the Ferrite Core correctly.

(3) Remove the cup S M3x6 SR Taptite screw, and then remove the FG harness.

(4) Remove the three cup S M3x6 SR Taptite screws and two Screw pan M3x6 to remove the Main PCB by following the direction of 4a and 4b.

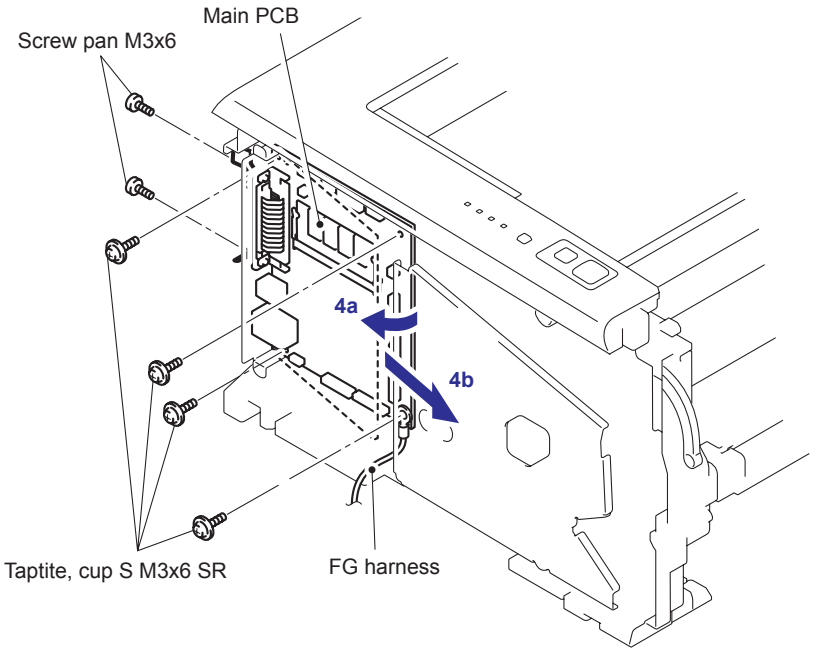

Fig. 5-36

8.9 Side Cover R

(1) Remove the two bind B M4x12 Taptite screws, and then remove the Side cover R by following the direction from 1a to 1d.

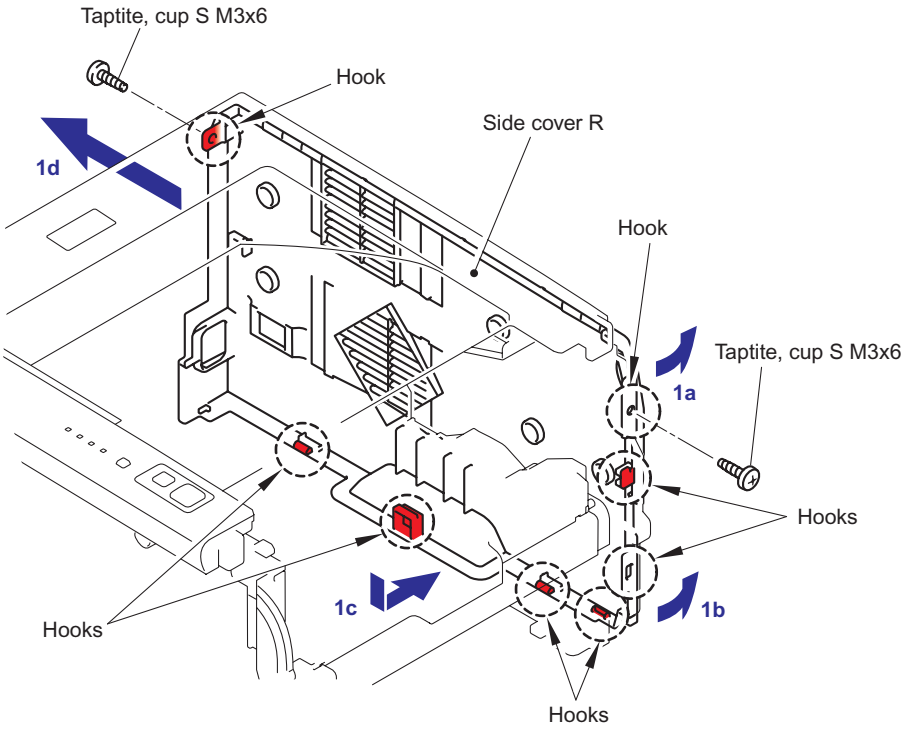

Fig. 5-37

8.10 Top Cover ASSY (LED model)

(1) Remove the two bind B M4x12 Taptite screws from the Top cover ASSY.

(2) Release all Hooks of the Top cover ASSY and lift up the front side of the Top cover ASSY.

(3) Remove the Top cover ASSY.

(4) Remove the Support flap 2.

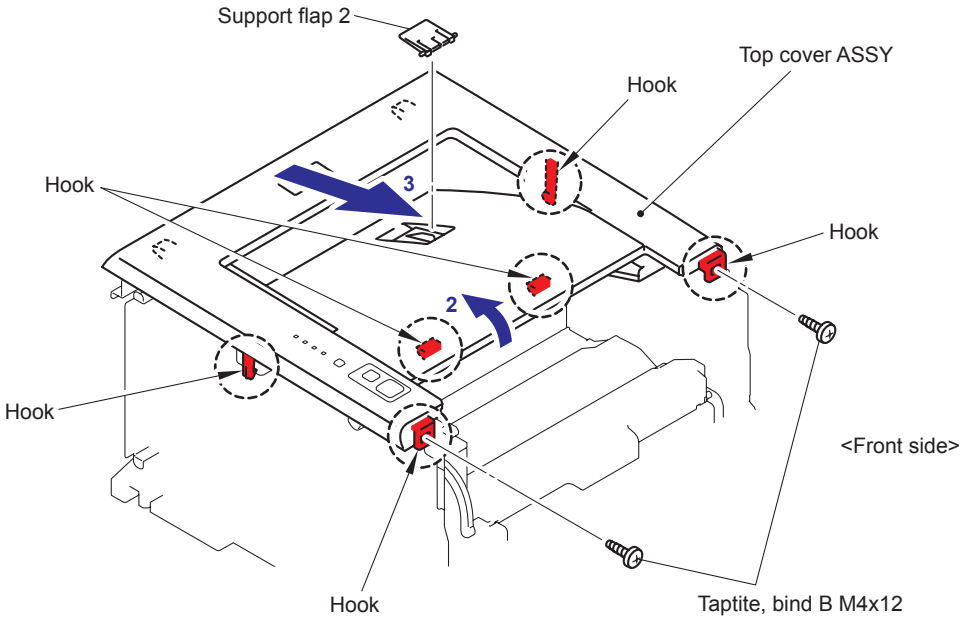

Fig. 5-38

Note:
There are procedures for disassembling Frame L after this procedure.
(8.33 FRAME L ASSY)

8.10.1 Panel PCB ASSY

(1) Turn the Top cover ASSY upside down.

(2) Remove the three cup B M3x8 Taptite screws, and then remove the Panel PCB ASSY.

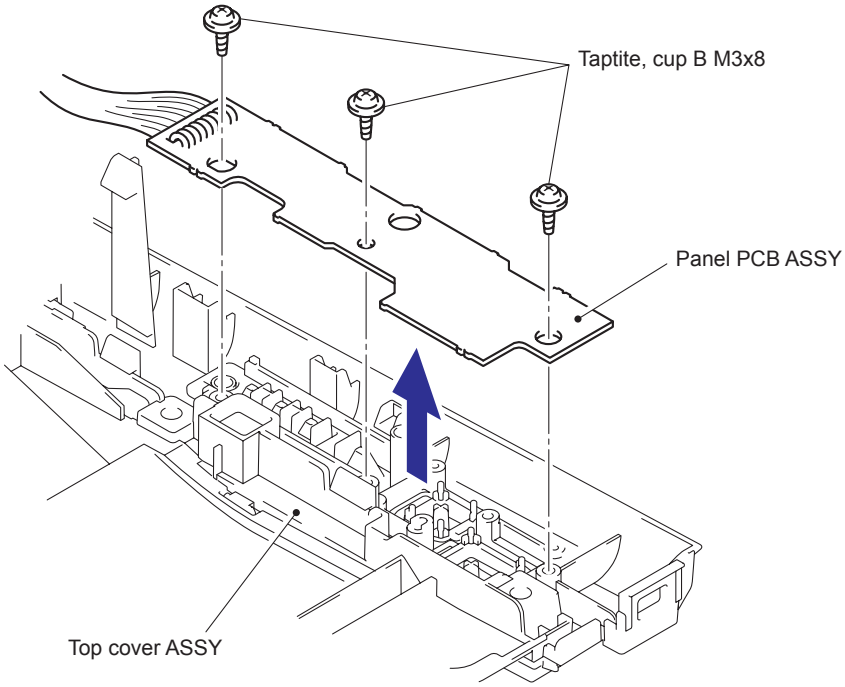

Fig. 5-39

8.10.2 SW Key A/B

(1) Remove the SW key A from the Top cover ASSY.

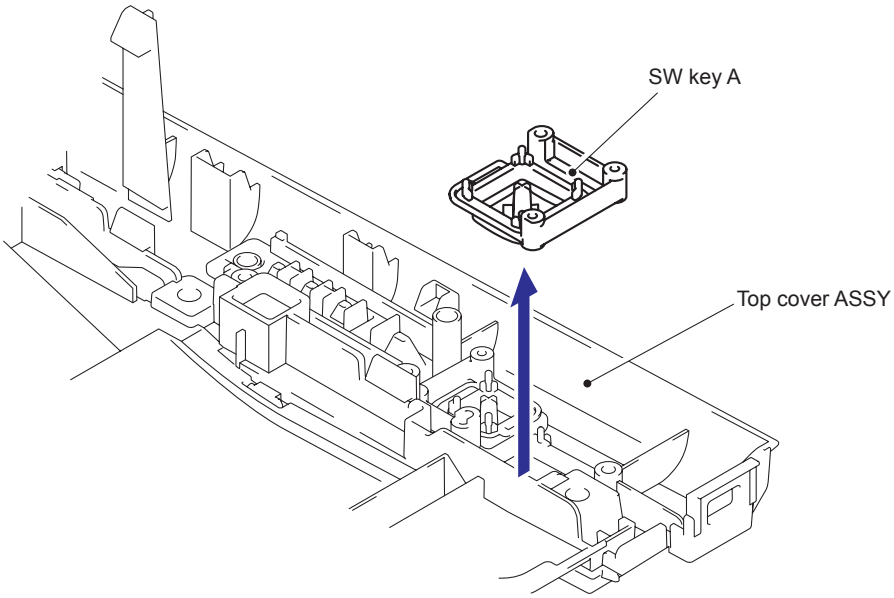

Fig. 5-40

Confidential

(2) Remove the SW key B from the Top cover ASSY.

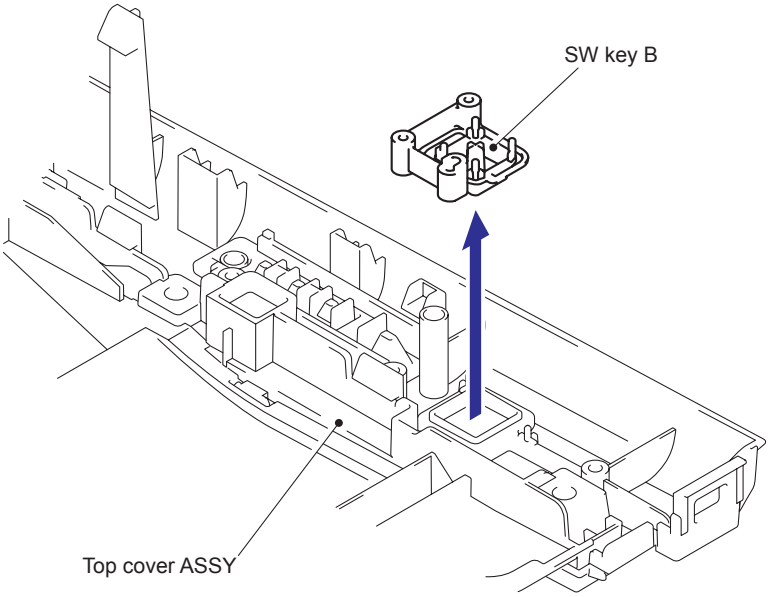

Fig. 5-41

Confidential

8.10.3 Inner Chute/Pinch Roller Holder

(1) Remove the six bind B M4x12 Taptite screws, and then remove the Inner chute.

(2) Release all Hooks of the Inner chute and lift up the front side of the Inner chute.

(3) Pull out the Inner chute to the front side.

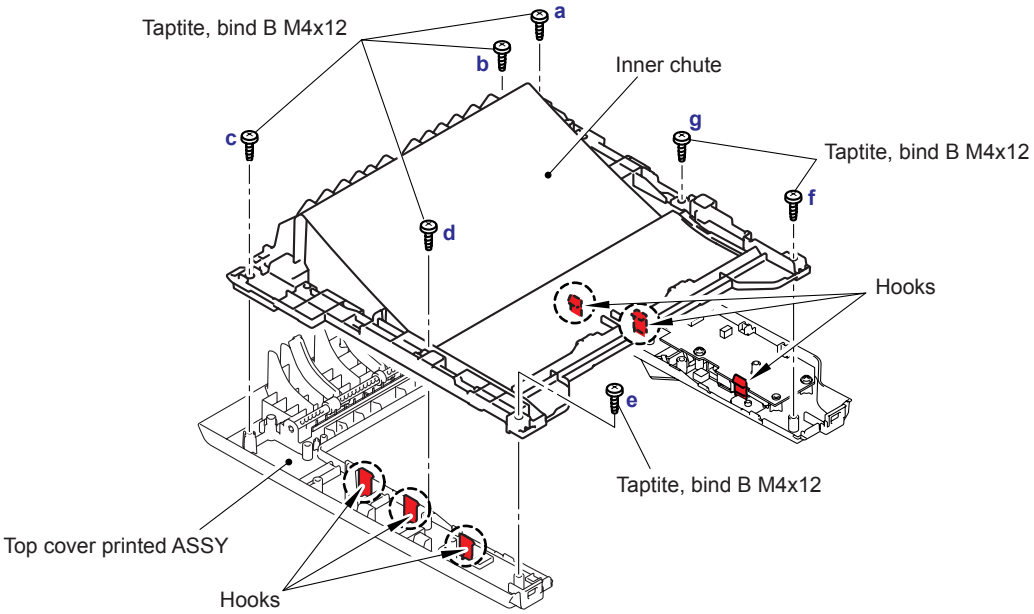

Fig. 5-42

Assembling Note:

- When assembling the Inner chute, secure the screws according to the order of alphabet described in the figure above.

(4) Turn the Inner chute upside down.

(5) Remove the Pinch roller holder from the Inner chute.

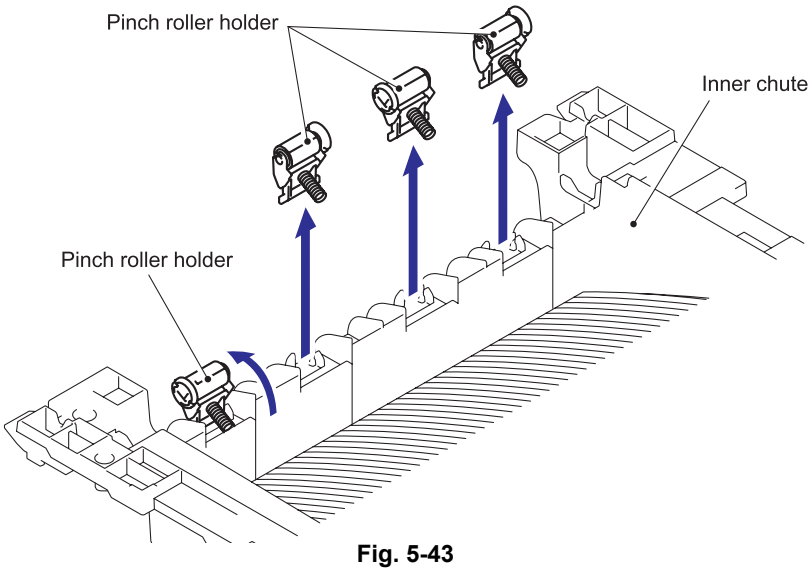

Fig. 5-43

Assembling Note:

- When assembling the Pinch roller holder, be sure that its direction is correct as shown in the figure above.

8.11 Top Cover ASSY/Panel Plate Printed ASSY (LCD model)

(1) Remove the two bind B M4x12 Taptite screws from the Top cover ASSY.

(2) Release all Hooks of the Top cover ASSY and lift up the front side of the Top cover ASSY.

(3) Remove the Top cover ASSY.

(4) Remove the Paper supporter.

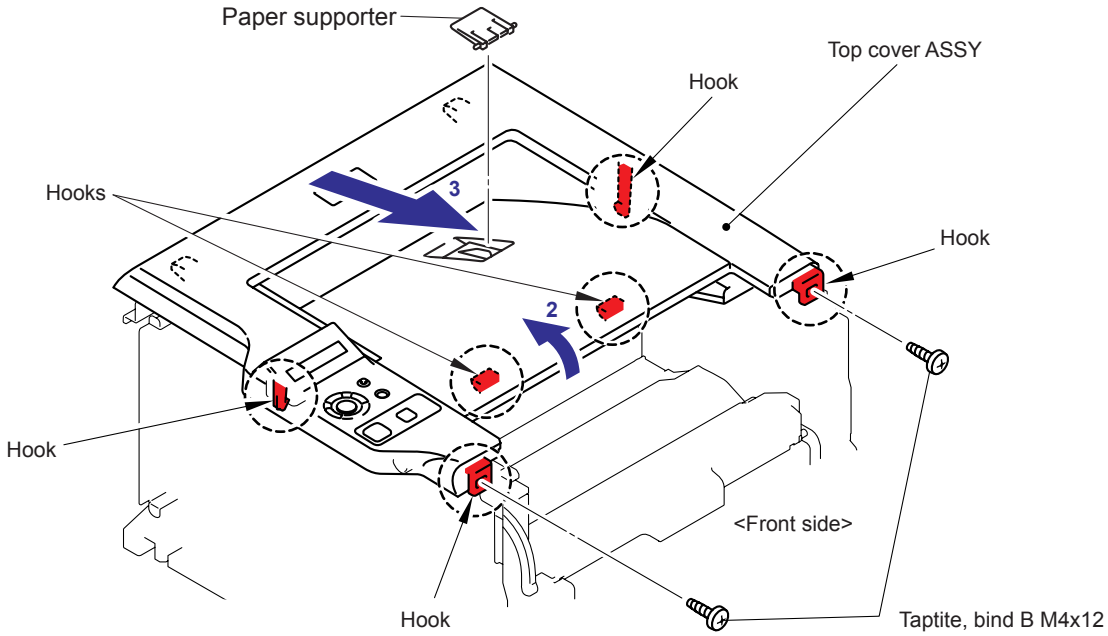

Fig. 5-44

(5) Remove the Panel Plate Printed ASSY from the Top cover ASSY.

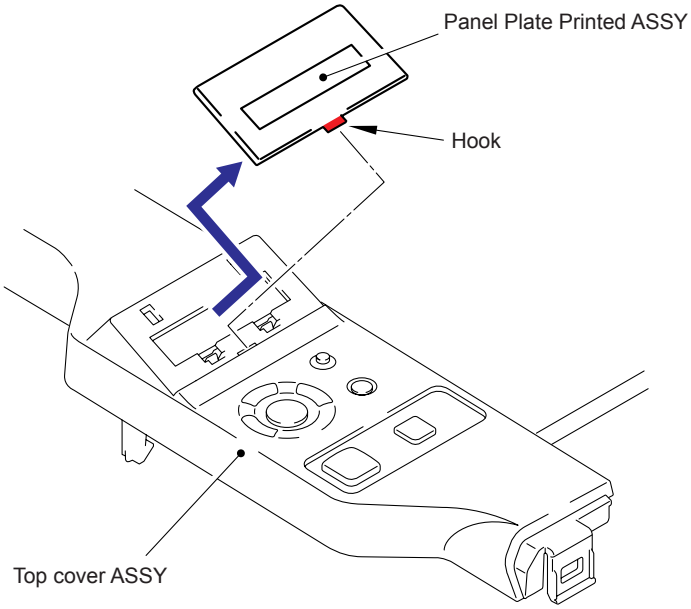

Fig. 5-45

Note:
There are procedures for disassembling Frame L after this procedure.
(8.33 FRAME L ASSY)

8.11.1 Inner Chute/Pinch Roller Holder

(1) Remove the seven bind B M4x12 Taptite screws, and then remove the Inner chute.

(2) Release all Hooks of the Inner chute and lift up the front side of the Inner chute.

(3) Pull out the Inner chute to the front side.

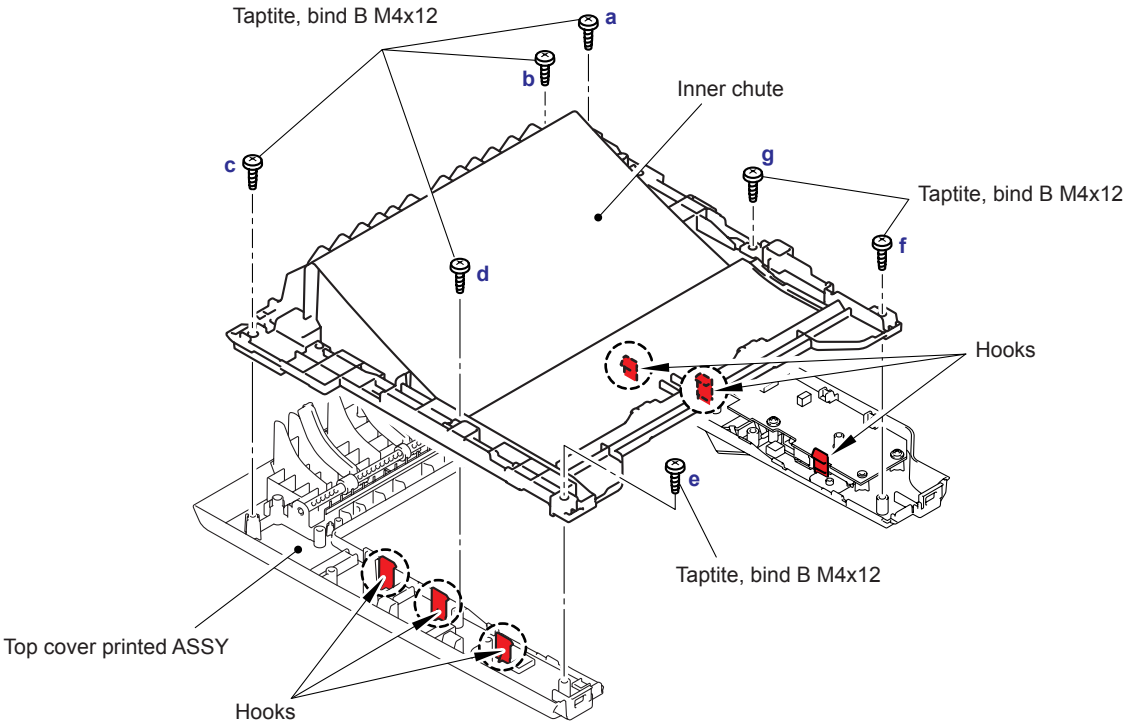

Fig. 5-46

Assembling Note:

- When assembling the Inner chute, secure the screws according to the order of alphabet described in the figure above.

(4) Turn the Inner chute upside down.

(5) Remove the Pinch roller holder from the Inner chute.

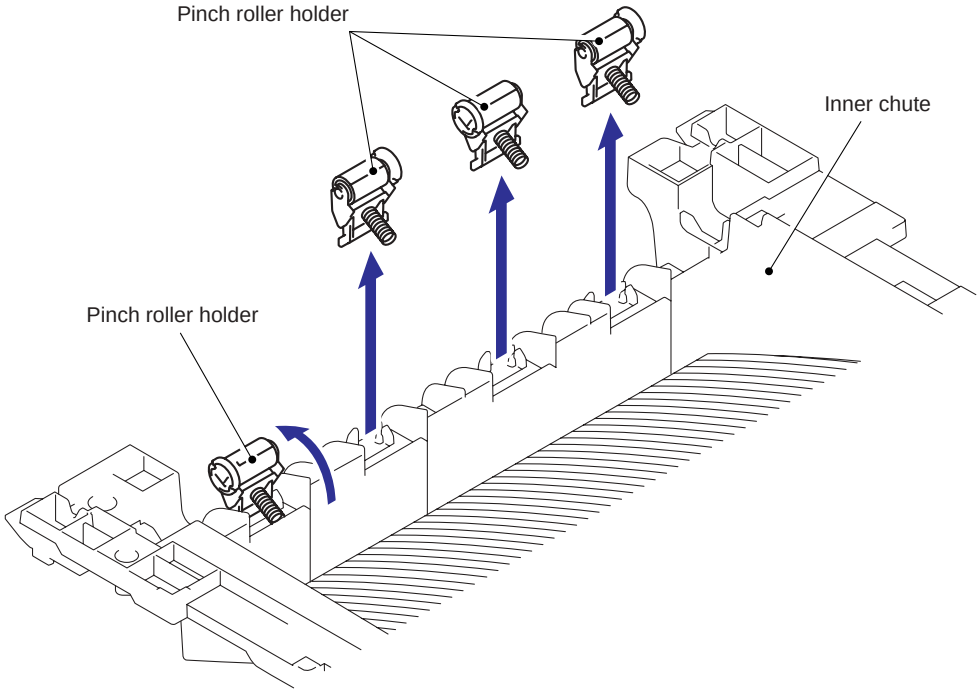

Fig. 5-47

Assembling Note:

- When assembling the Pinch roller holder, be sure that its direction is correct as shown in the figure above.

Confidential

8.11.2 Panel PCB ASSY

(1) Disconnect the Back light PCB harness from the LCD panel PCB ASSY.

(2) Release the Lock, and then remove the LCD panel PCB harness.

Note:

- After disconnecting the flat cable(s), check that each cable is not damaged at its end or short-circuited.
- When connecting the flat cable(s), do not insert it at an angle. After insertion, check that the cable is not at an angle.

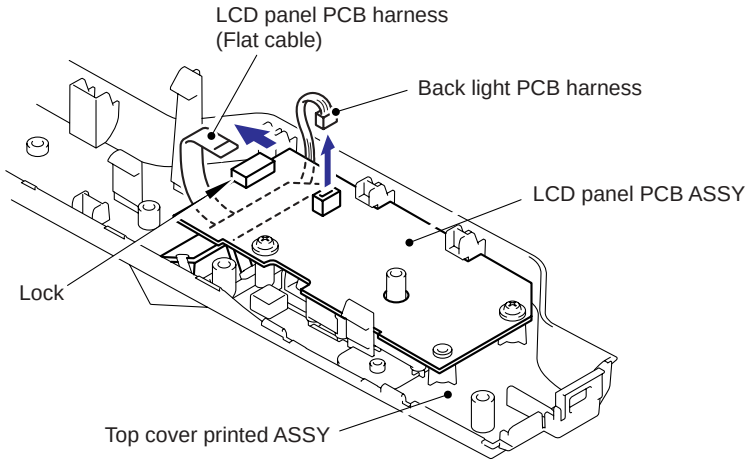

Fig. 5-48

(3) Remove the three cup B M3x8 Taptite screws, and then remove the LCD panel PCB ASSY.

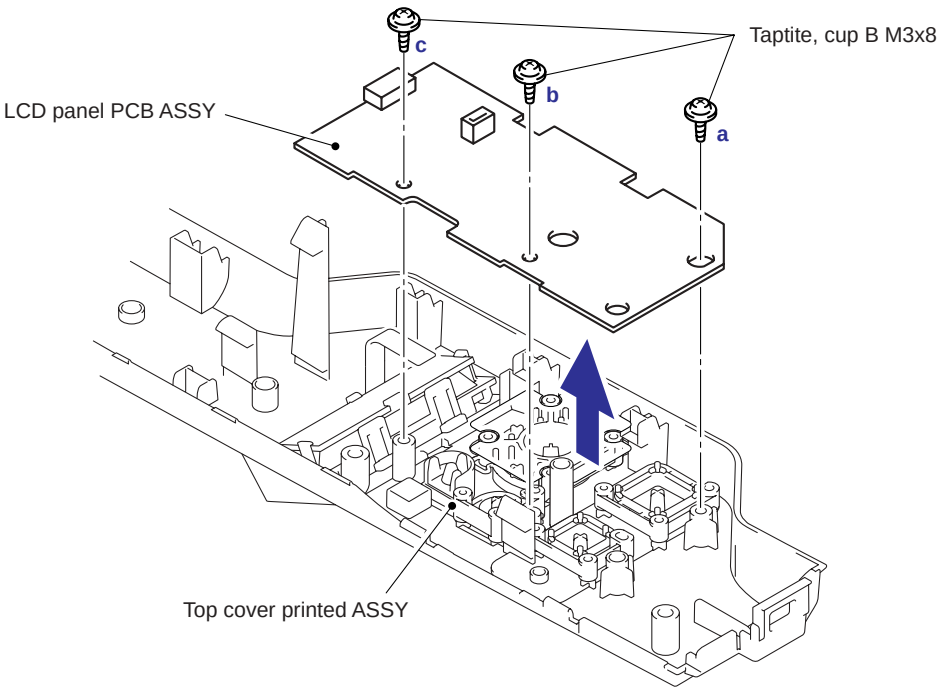

Fig. 5-49

Assembling Note:

- When assembling the LCD panel PCB ASSY, secure the screws according to the order of alphabet described in the figure above.

Confidential

8.11.3 SW Key A/B/C /Set Key Printed ASSY

(1) Remove the SW key A from the Top cover ASSY.

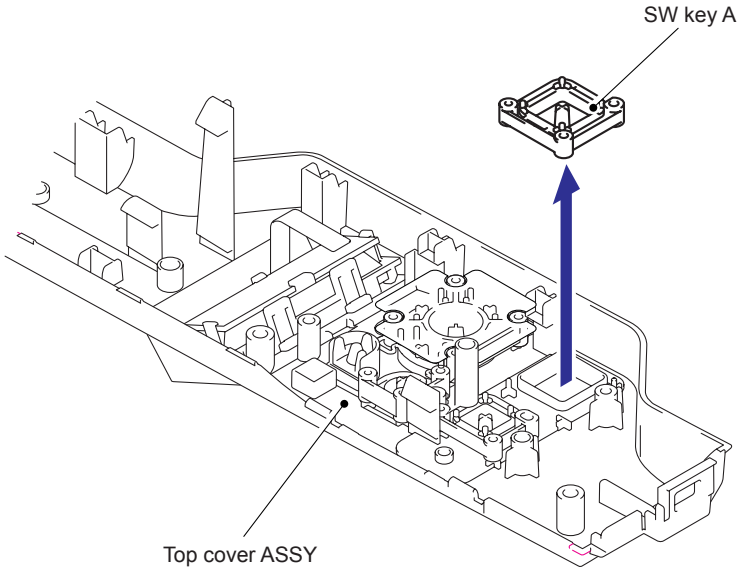

Fig. 5-50

(2) Remove the SW key B from the Top cover ASSY.

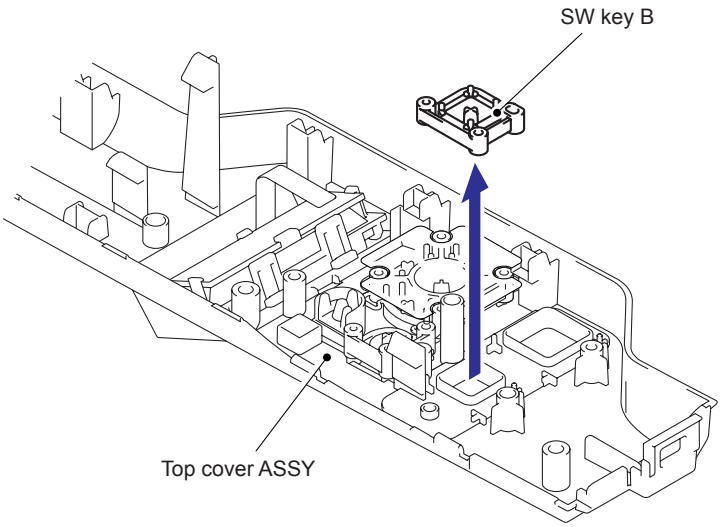

Fig. 5-51

Confidential

(3) Remove the SW key C from the Top cover ASSY.

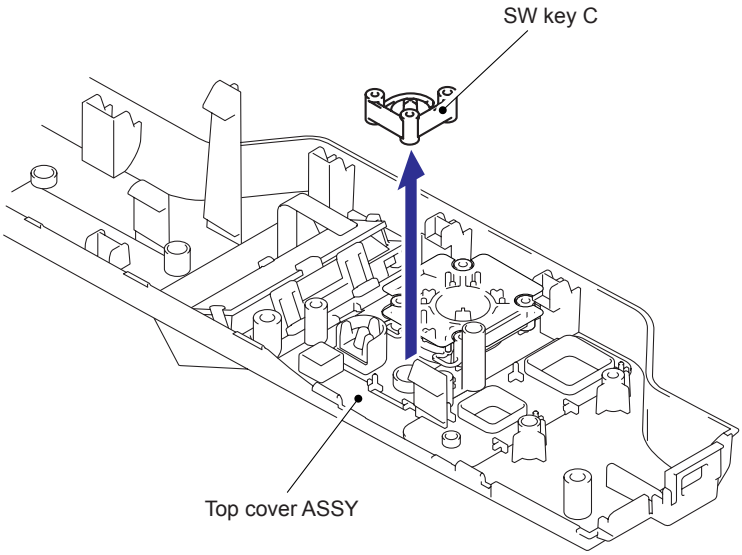

Fig. 5-52

(4) Remove the Set key film.

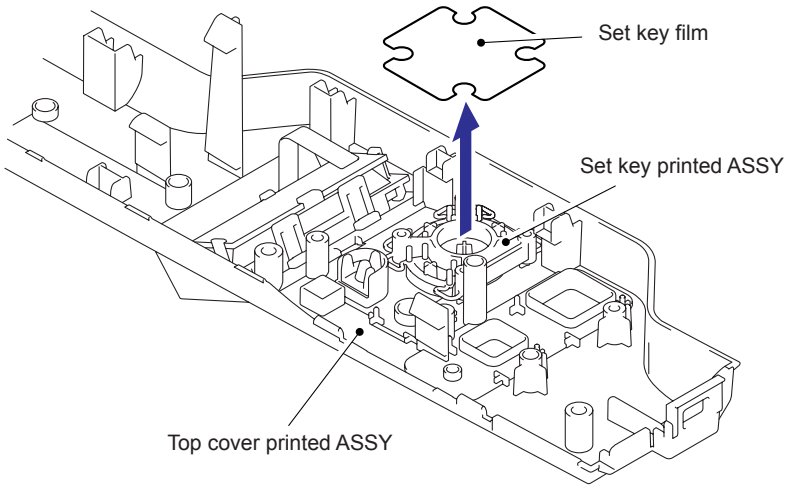

Fig. 5-53

Confidential

(5) Remove the Set key printed ASSY from the Top cover ASSY.

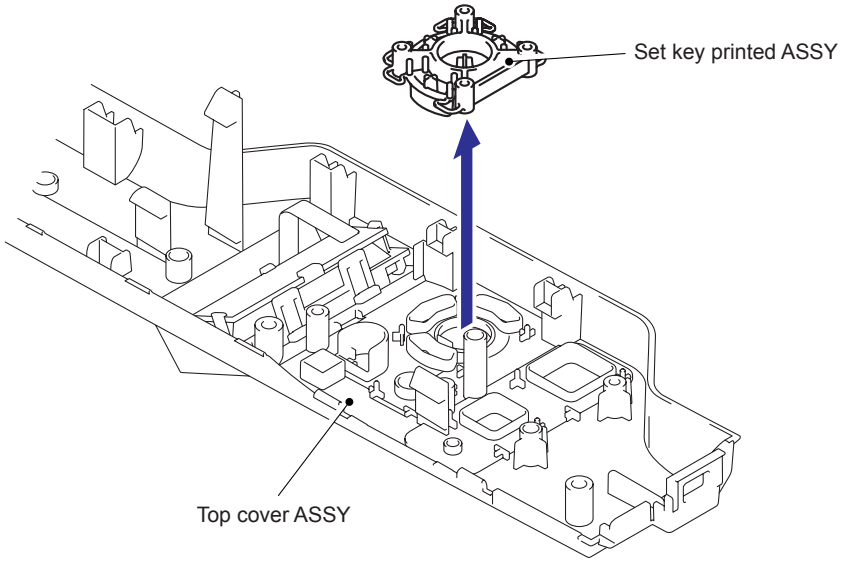

Fig. 5-54

(6) Remove the Key top from the Set key printed ASSY.

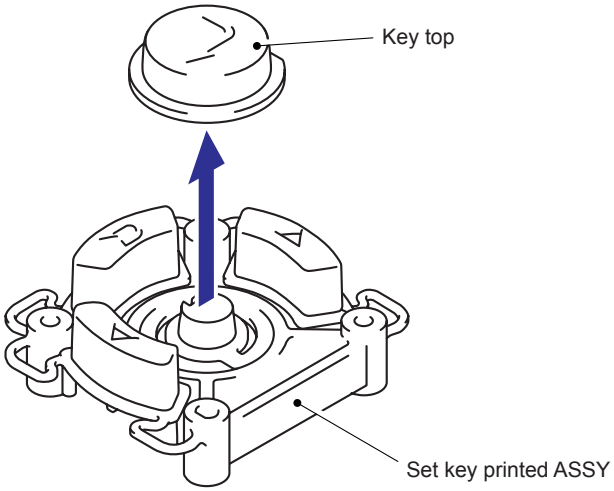

Fig. 5-55

Confidential

8.11.4 LCD Holder ASSY

(1) Release the Hook, and remove the LCD holder from the Top cover ASSY.

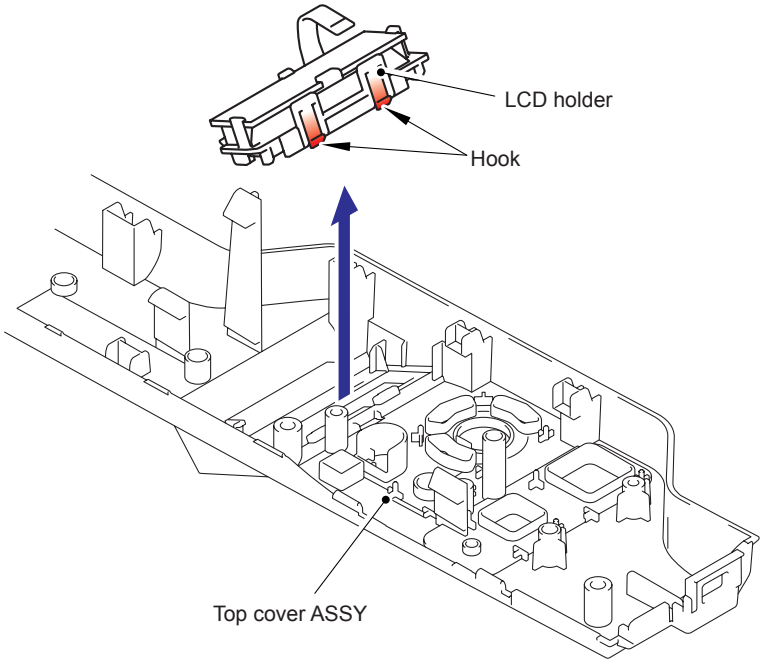

Fig. 5-56

(2) Release the Hook, and remove the Back light PCB ASSY from the LCD holder.

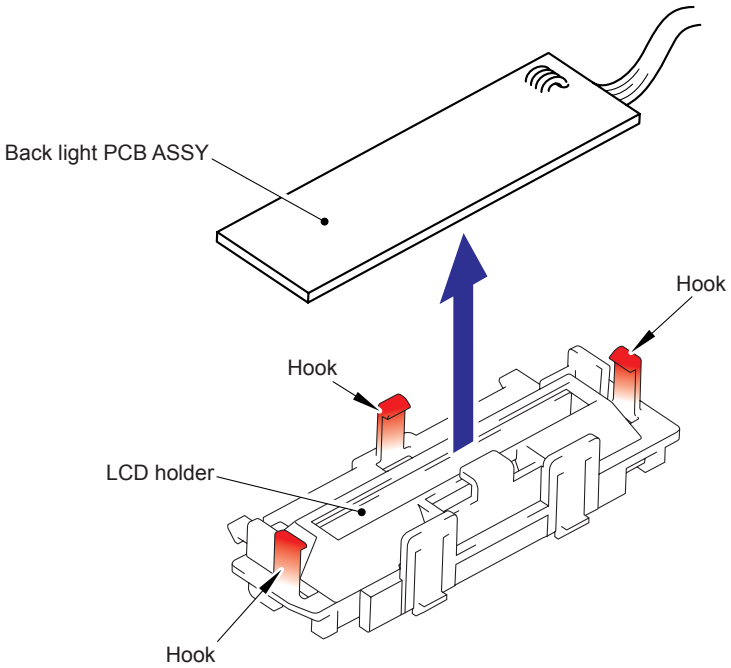

Fig. 5-57

Confidential

(3) Release the Hook, and remove the LCD from the LCD holder.

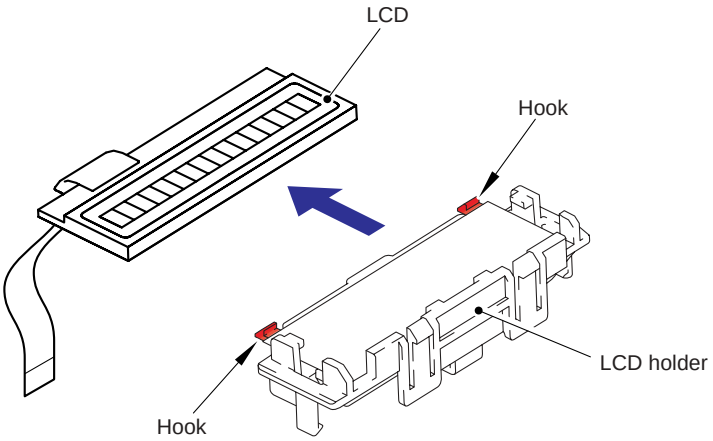

Fig. 5-58

(4) Remove the Back light film from the LCD holder.

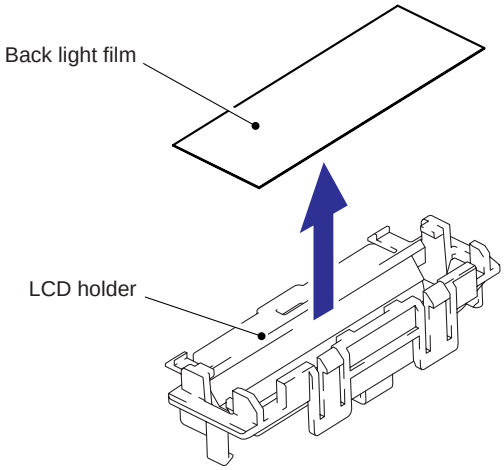

Fig. 5-59

Confidential

8.12 Gear Plate Calking ASSY/Develop Joint/Main Motor ASSY

(1) Place the printer body so that the Frame L is at the top.

(2) Remove the eight bind B M4x12 Taptite screws and one cup S M3x6 taptite screw.

(3) Remove the Gear plate calking ASSY from the Frame L.

Note:
- Be careful not to drop the gear.

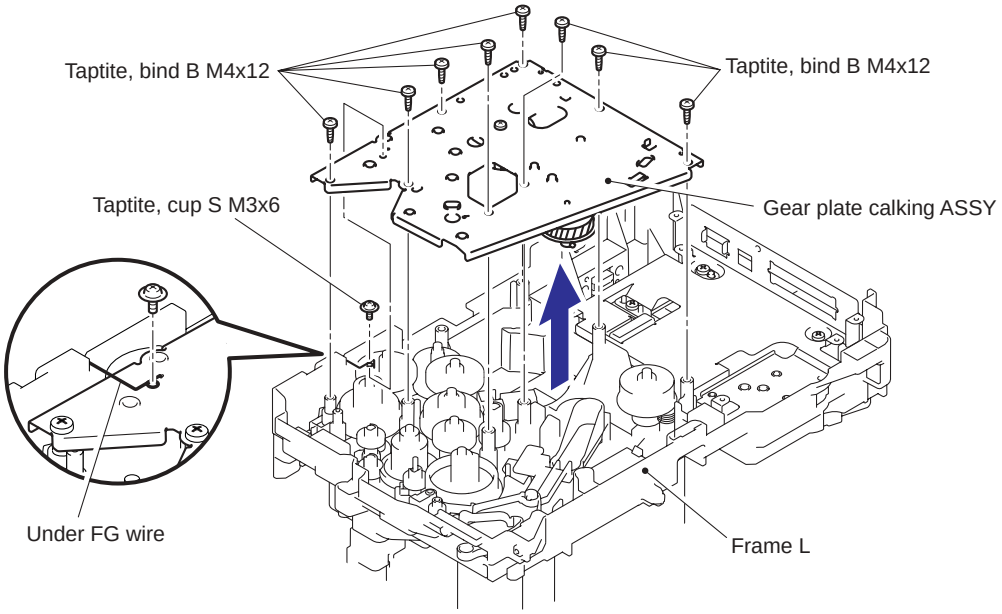

Fig. 5-60

Confidential

(4) Remove the four cup S M3x6 Taptite screws, and then remove the Main motor ASSY.

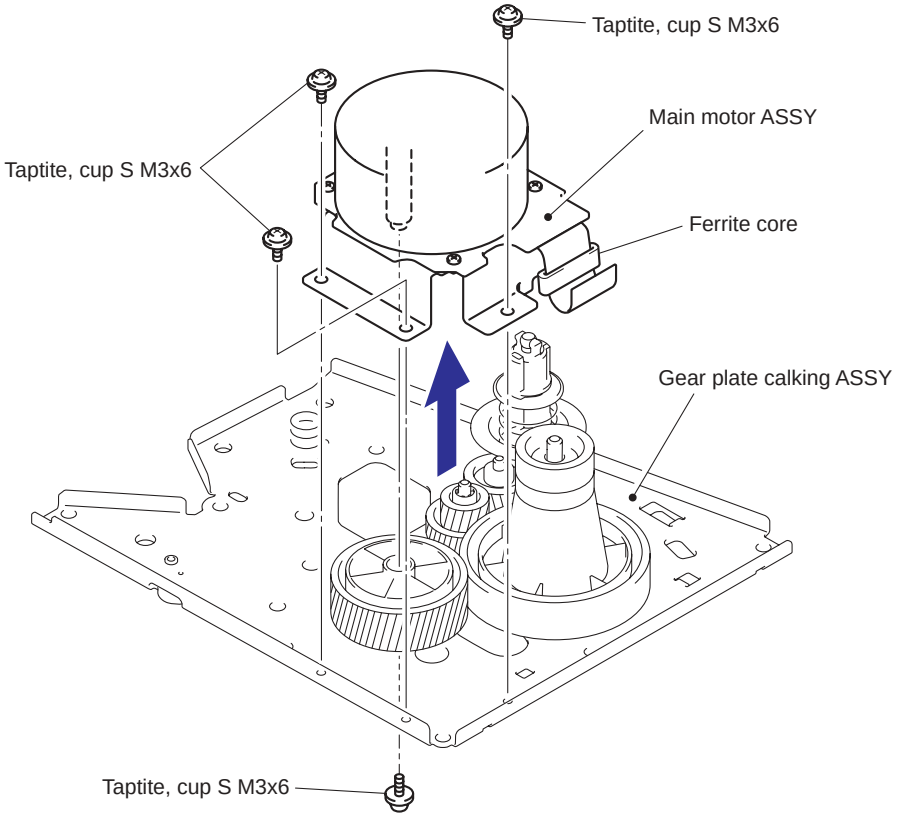

Fig. 5-61

(5) Remove the Develop joint from the Gear plate calking ASSY.

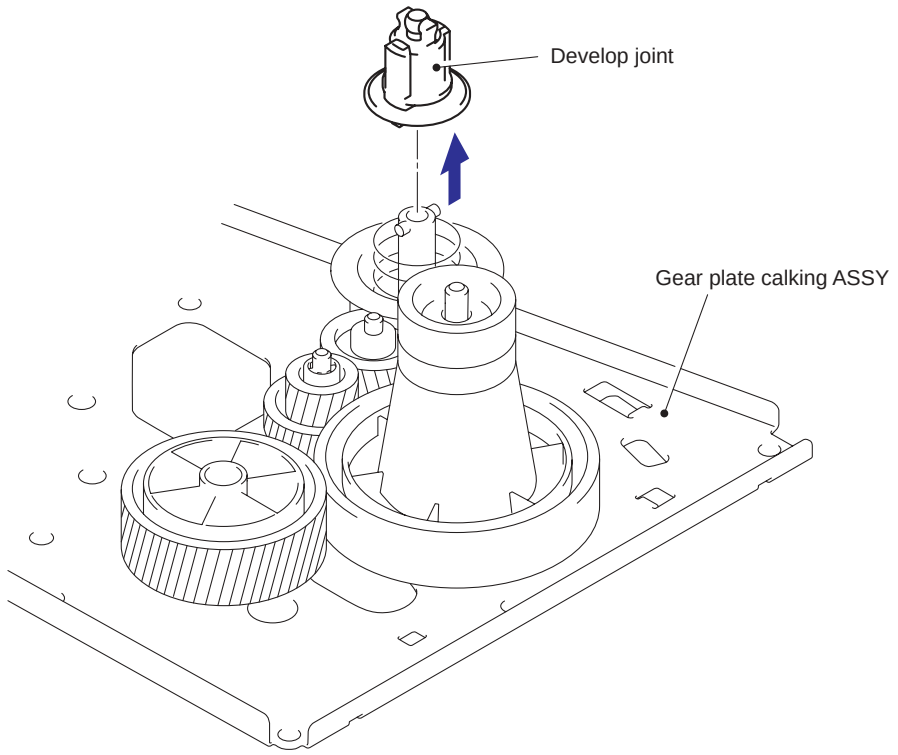

Fig. 5-62

Confidential

8.13 Main Shield Plate ASSY

(1) Remove the Insulation sheet.

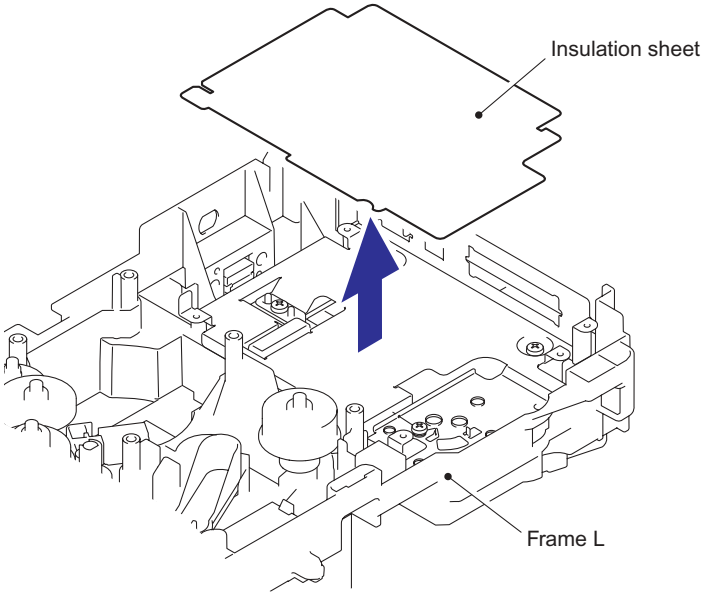

Fig. 5-63

Confidential

(2) Remove the two bind B M4x12 Taptite screws, and then remove the Plate.

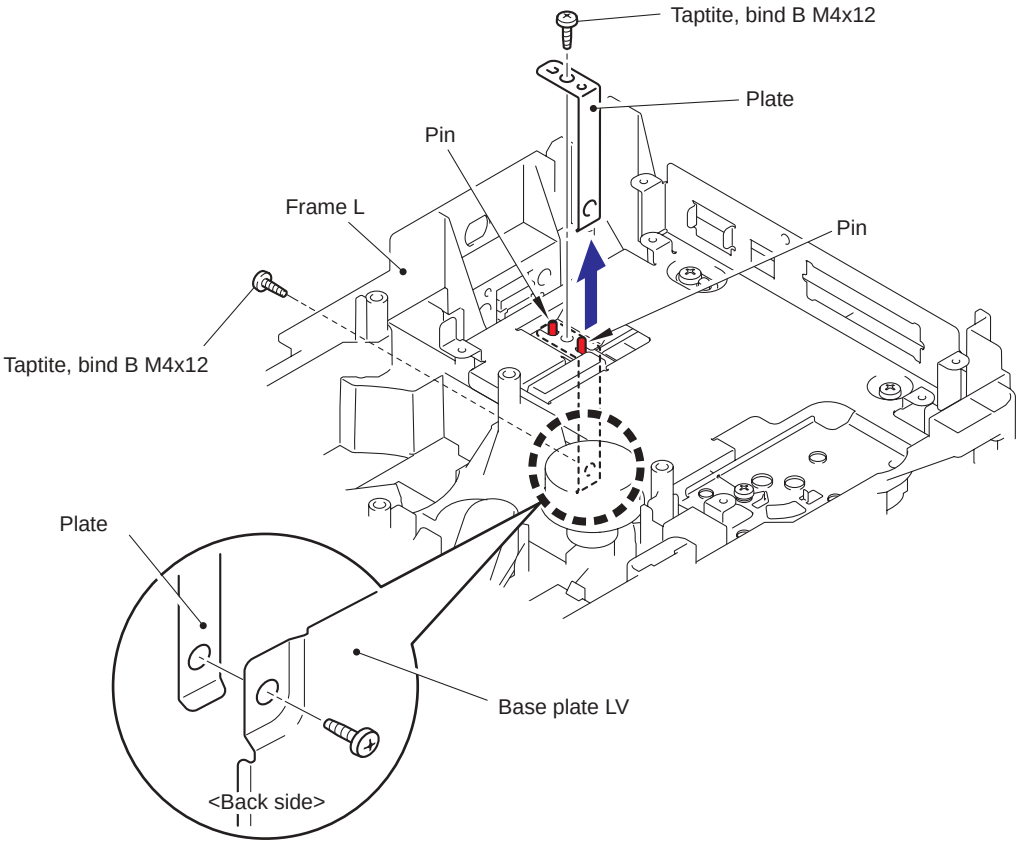

Fig. 5-64

Assembling Note:

- When assembling the Plate, ensure to put the Plate into the base plate LV.
- When assembling the Plate, secure the screw at the Frame L side first, then the screw at the base plate LV side.

(3) Remove the three bind B M4x12 Taptite screws and cup S M3x6 Taptite screw, and then remove the Main shield plate ASSY.

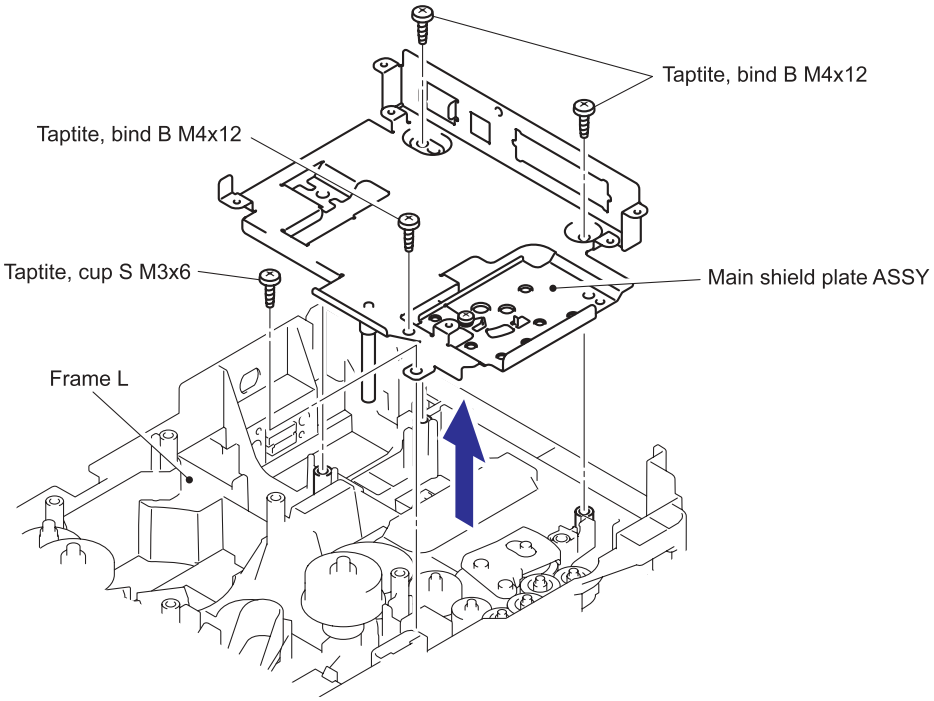

Fig. 5-65

Assembling Note:

- Hang the Tip of the Switch arm spring of the Main shield plate on the Eject gear 28 sector.

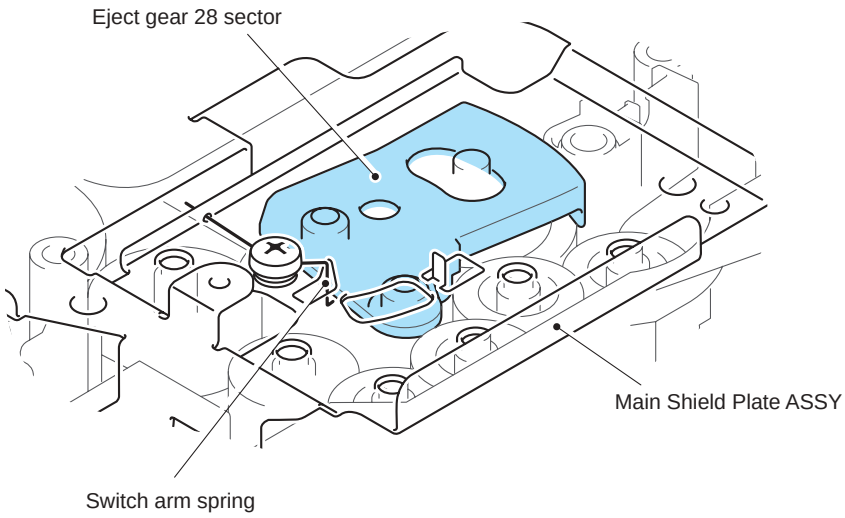

Fig. 5-66

Confidential

8.14 Relay Rear PCB ASSY/Connector

(1) Remove the Relay rear PCB ASSY (Include the DX sensor).

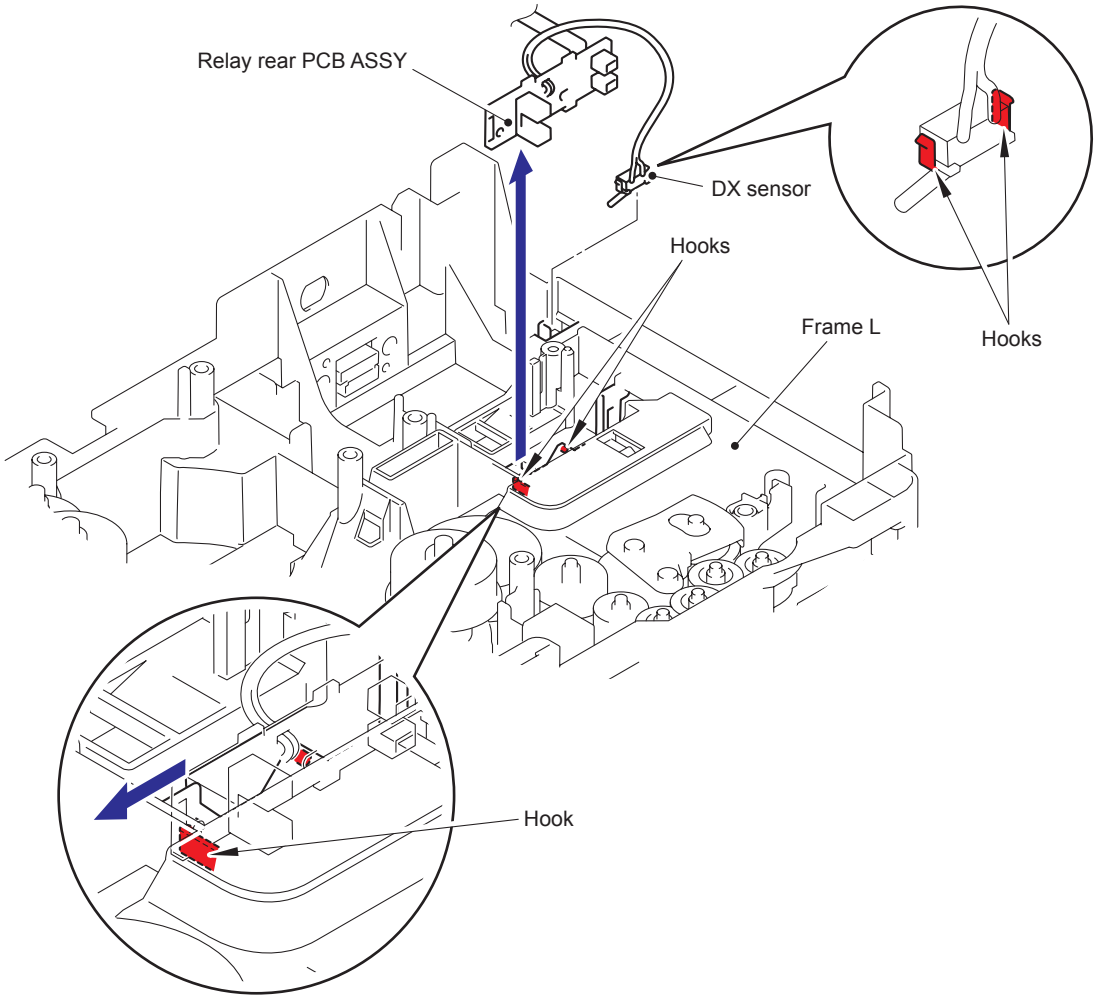

Fig. 5-67

(2) Remove the Connector harness.

(3) Disconnect the LT connector while pressing the Hook inwards.

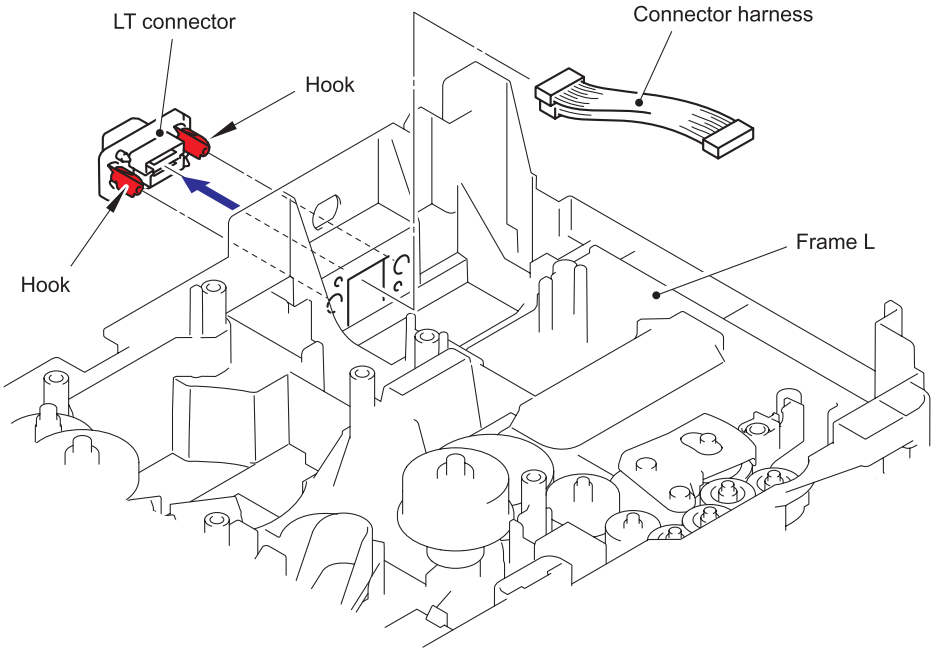

Fig. 5-68

Assembling Note:

- When assembling the LT connector, ensure that its direction is correct referring to the figure below.

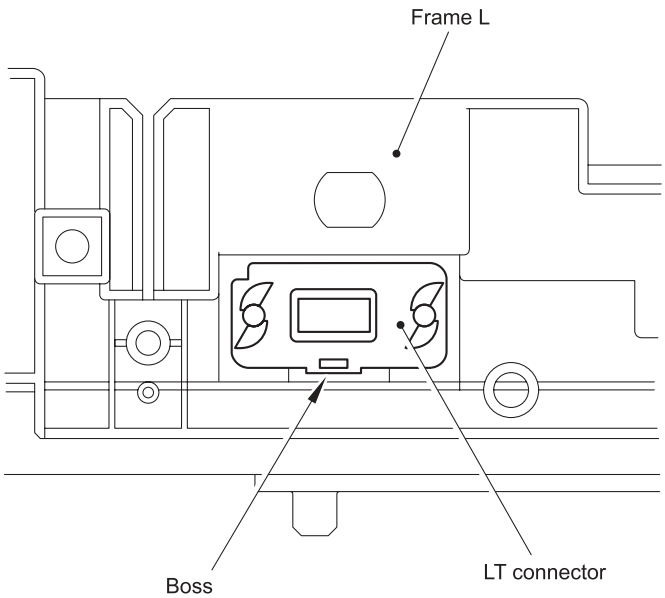

Fig. 5-69

Confidential

8.15 Relay Front PCB ASSY

(1) Remove the Relay front PCB ASSY.

(2) Disconnect the five connectors from the Relay front PCB ASSY.

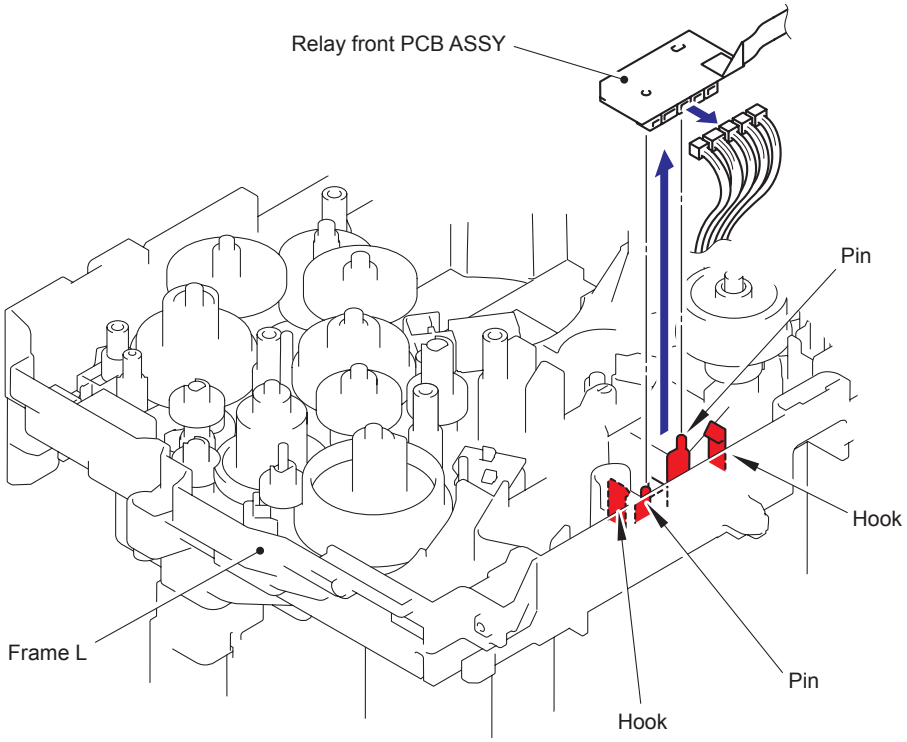

Fig. 5-70

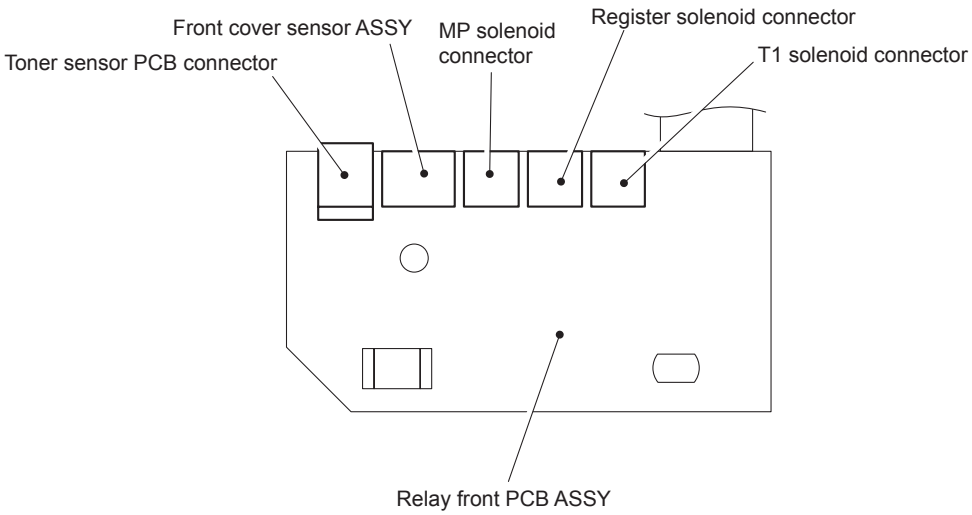

Fig. 5-71

Confidential

8.16 Drive Release Link

(1) Remove the bind B M3x10 Taptite screw.

(2) Lift up the back end of the Drive release cam slightly while lifting up the MP solenoid lever and the MP solenoid ASSY and remove them from the guide part of the Frame L.

(3) Turn the Drive release link to the direction of the arrow 3 until the groove of the Drive release link is aligned with the boss of the Frame L.

(4) Remove the Drive release cam.

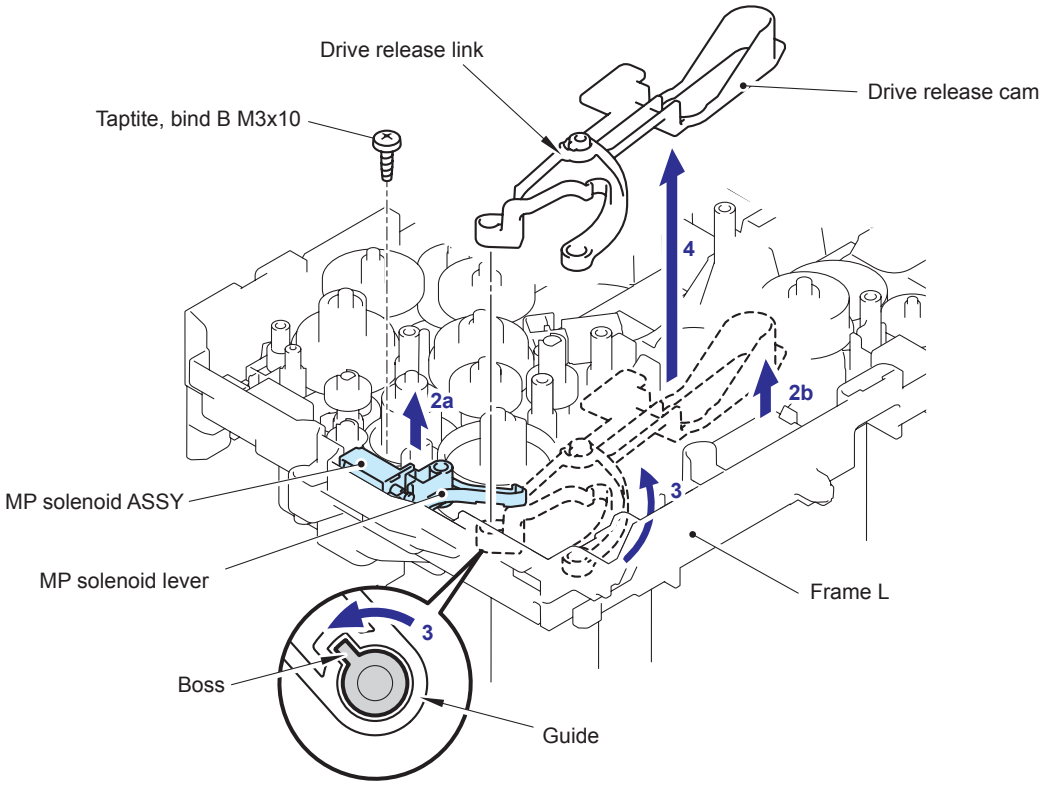

Fig. 5-72

Confidential

8.17 MP Solenoid ASSY

(1) Remove the cup B M3x8 Taptite screw, and then remove the Spring.

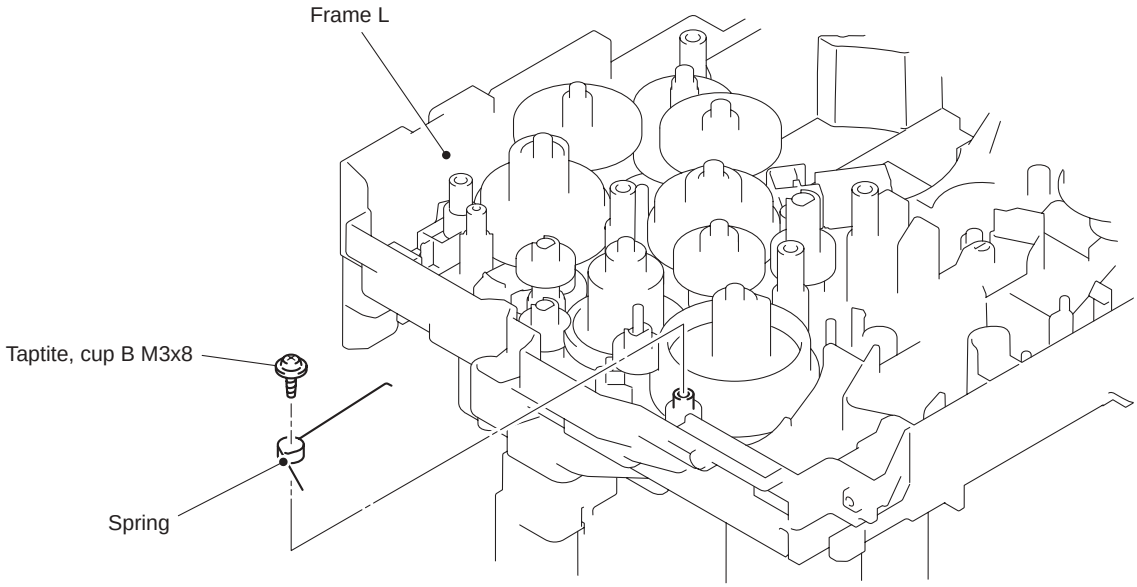

Fig. 5-73

Assembling Note:

- When assembling the Spring, ensure that its direction is correct referring to the figure below.

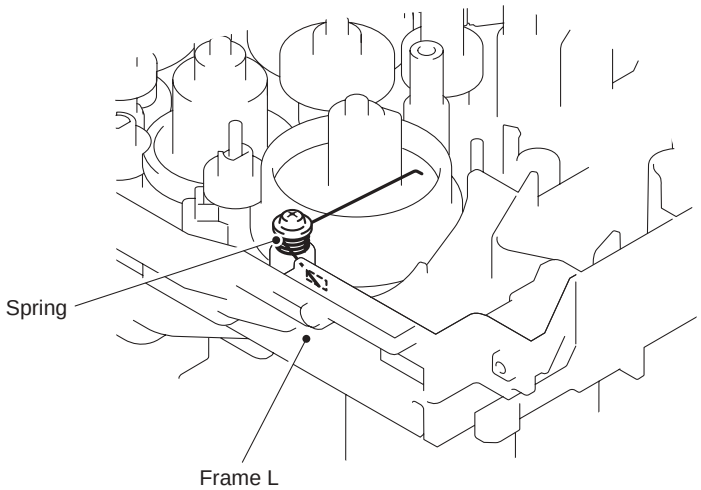

Fig. 5-74

Confidential

(2) Remove the MP solenoid ASSY, Solenoid release spring P/R and MP solenoid lever.

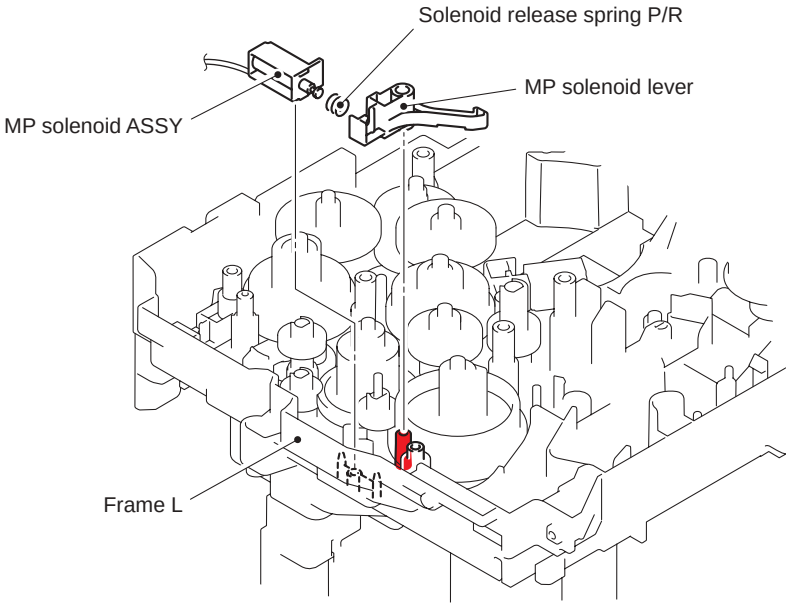

Fig. 5-75

8.18 T1 Solenoid ASSY

(1) Remove the bind B M3x10 Taptite screw.

(2) Remove the T1 solenoid ASSY and the Solenoid release spring.

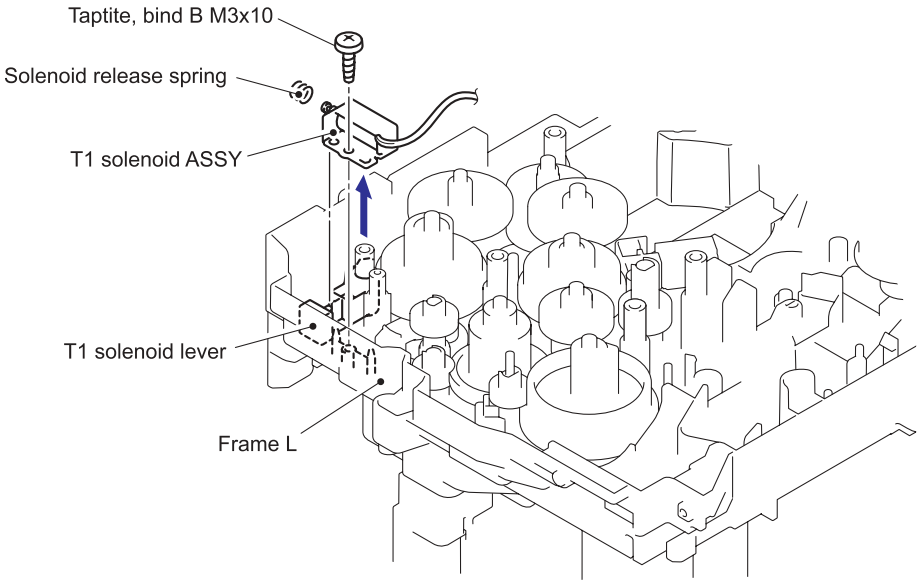

Fig. 5-76

Confidential

8.19 Toner Sensor PCB ASSY

(1) Remove the Toner sensor PCB ASSY from the Frame L.

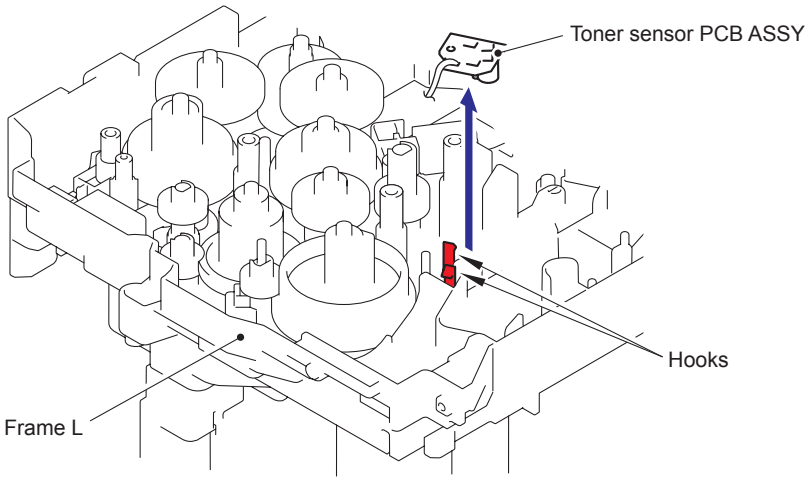

Fig. 5-77

(2) Remove the PT sensor holder from the Toner sensor PCB ASSY.

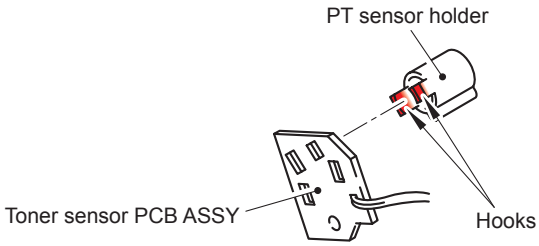

Fig. 5-78

Confidential

8.20 Register Solenoid

(1) Remove the bind B M3x10 Taptite screw.

(2) Remove the Register solenoid and the Solenoid release spring.

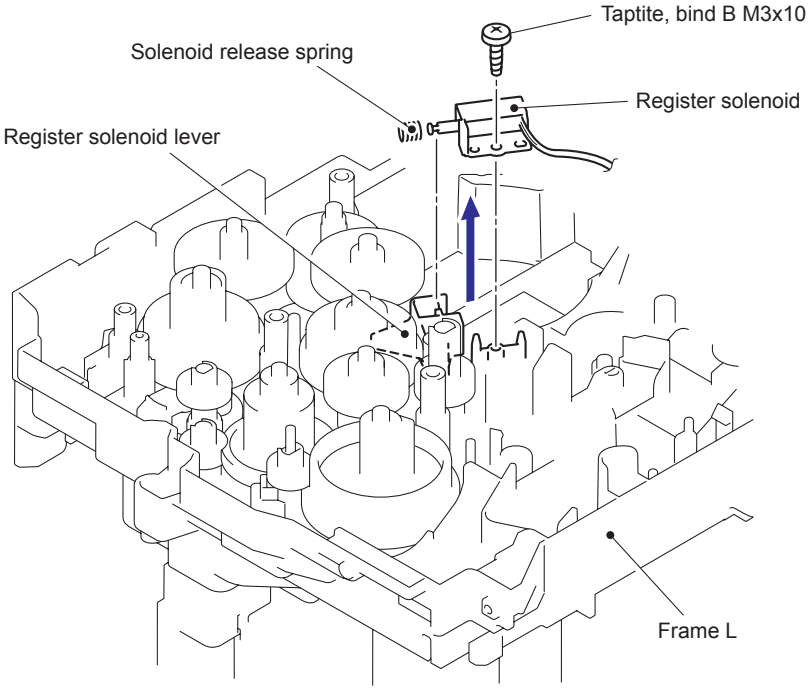

Fig. 5-79

8.21 Ejector Solenoid

(1) Remove the bind B M3x10 Taptite screw.

(2) Remove the Ejector solenoid and the Solenoid release spring.

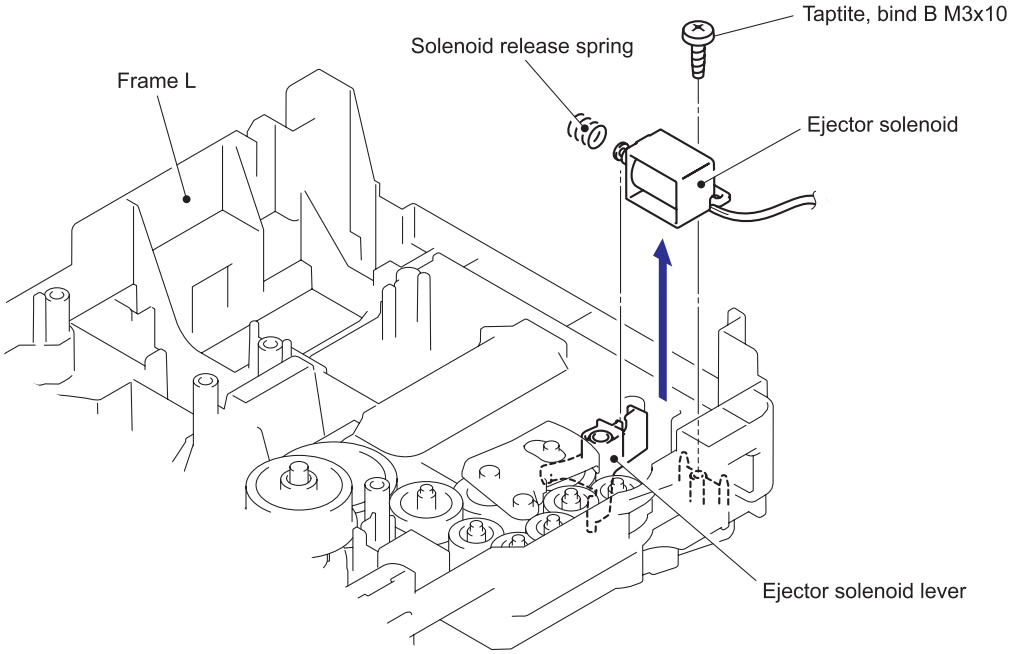

Fig. 5-80

Confidential

8.22 Front cover sensor ASSY

(1) Remove the Front cover sensor ASSY from the Frame L.

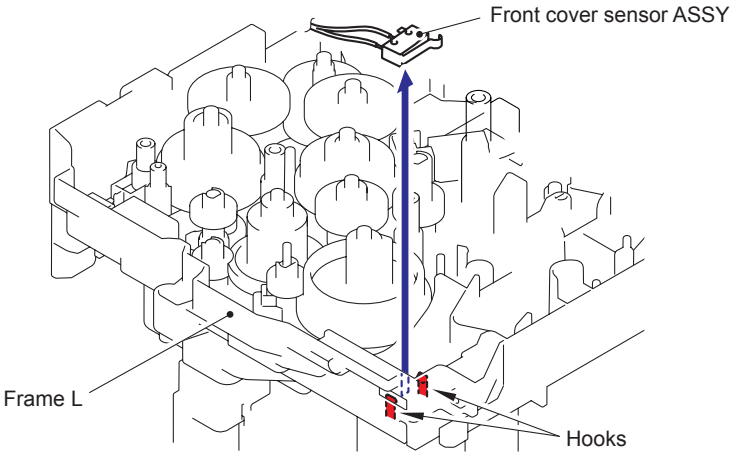

Fig. 5-81

8.23 New Toner Actuator

(1) Remove the cup B M2x6 Taptite screw.

(2) Remove the New toner actuator and the New toner actuator spring.

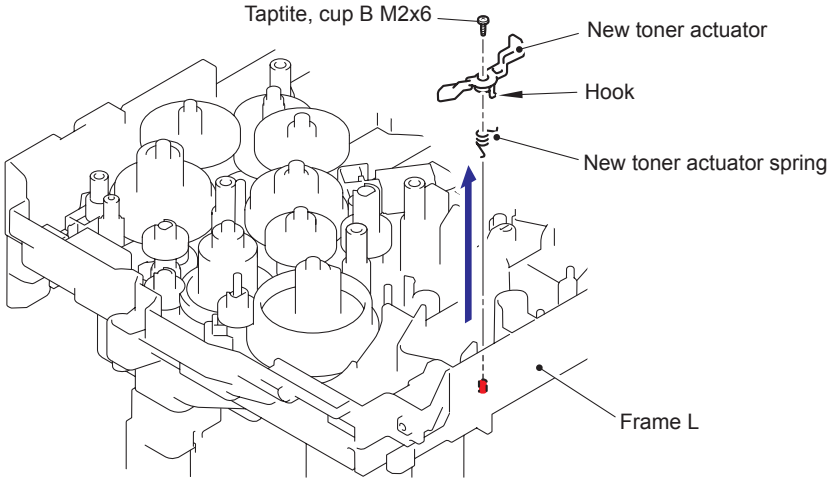

Fig. 5-82

Assembling Note:

- When assembling the New toner actuator spring, ensure that its direction is correct referring to the figure below.

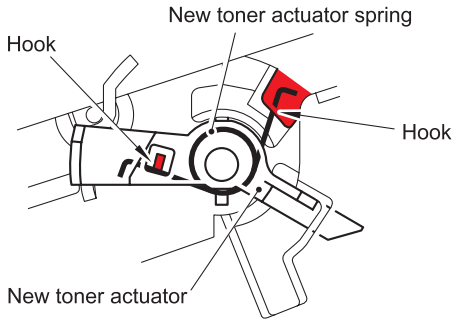

Fig. 5-83

Confidential

8.24 Gear 17/20/23

(1) Remove the Gear 23.

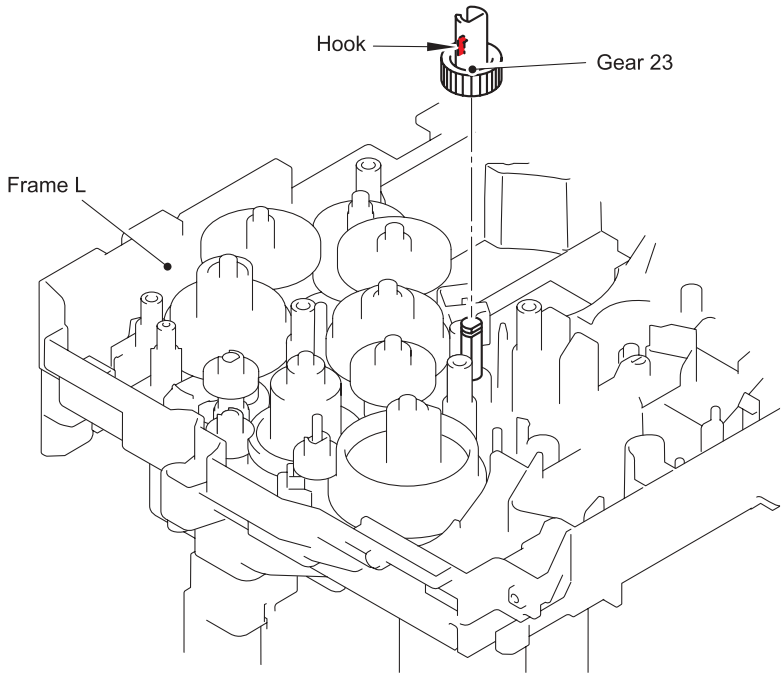

Fig. 5-84

(2) Remove the Gear 20.

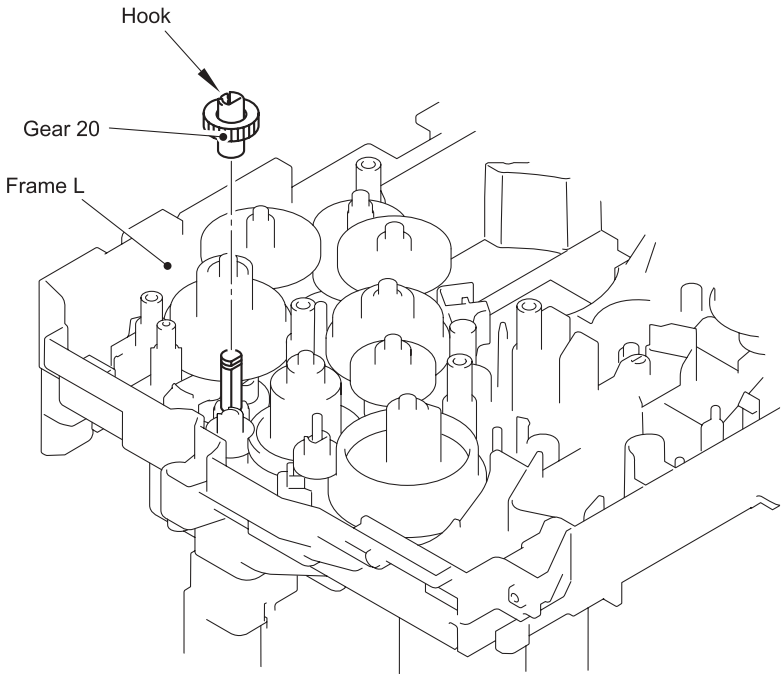

Fig. 5-85

Confidential

(3) Remove the Gear 17 (black).

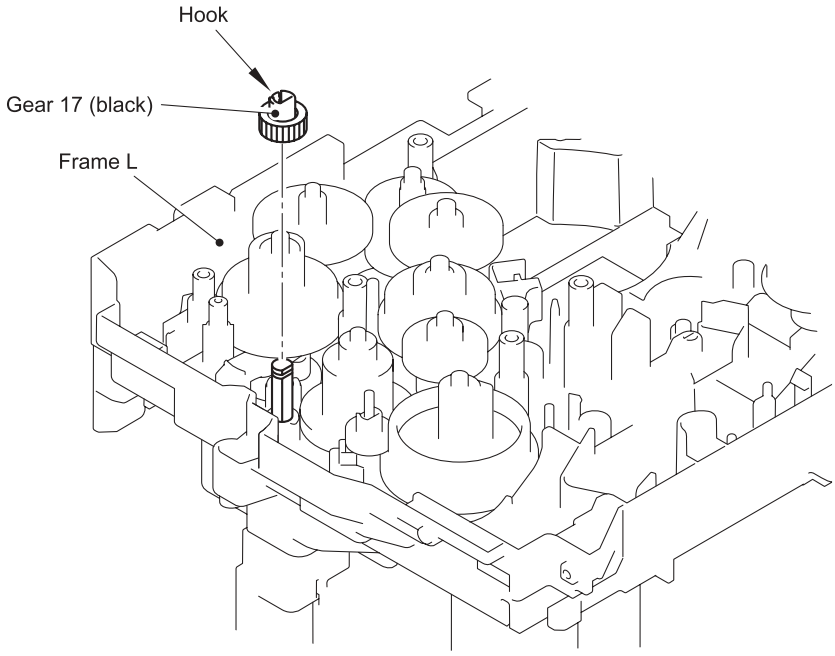

Fig. 5-86

(4) Remove the Gear 17 (white).

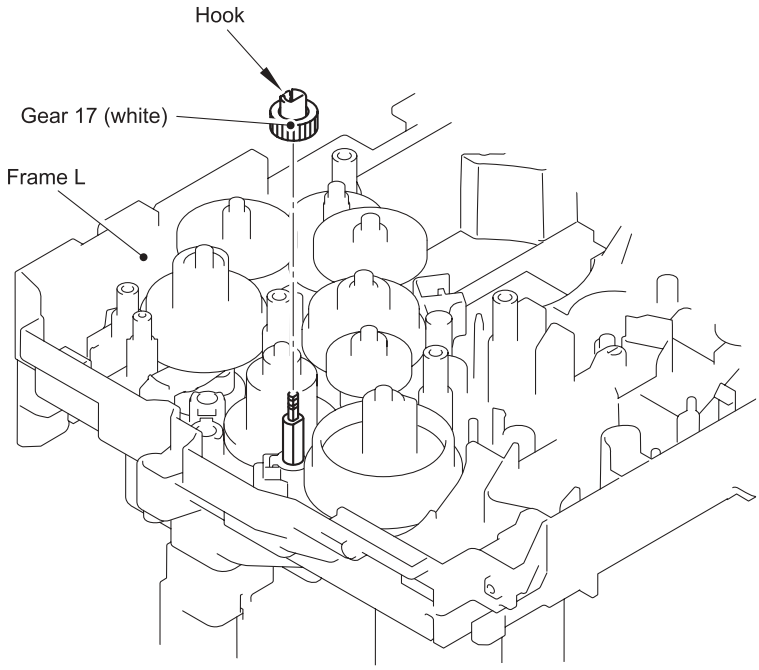

Fig. 5-87

8.25 Filter

(1) Slide the Sub duct to the direction of 1b while pressing the Hook to the direction of 1a and remove the Sub duct from the Air duct.

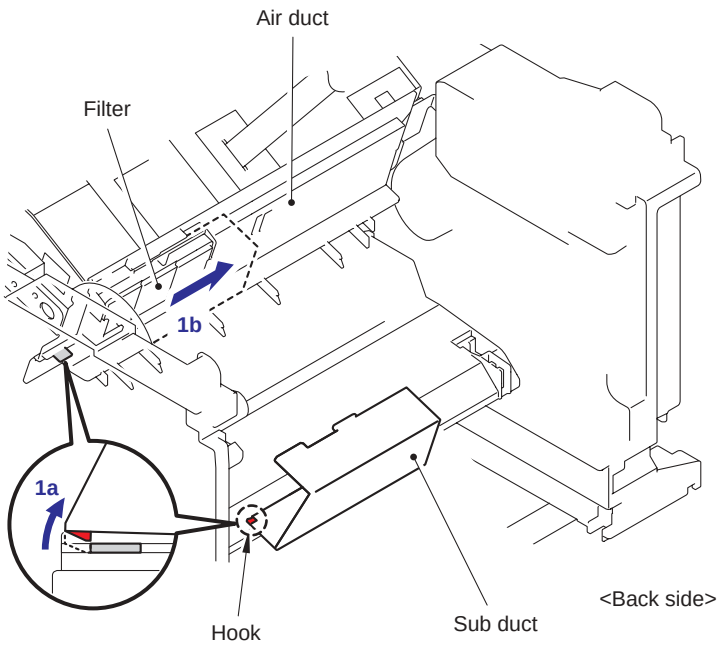

Fig. 5-88

(2) Remove the Filter from the Air duct.

Note:
- The filter is dirt. Be careful when disassembling or assembling it.

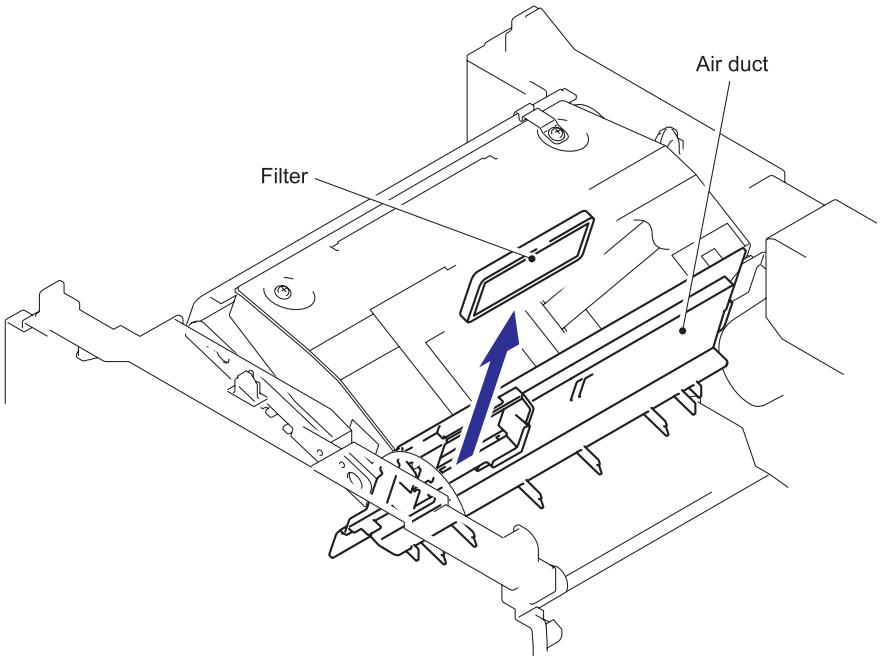

Fig. 5-89

Confidential

8.26 Laser Unit

(1) Release the Pin of the Air duct from the frame. Slide the Air duct to the direction of 1b and remove the Air duct.

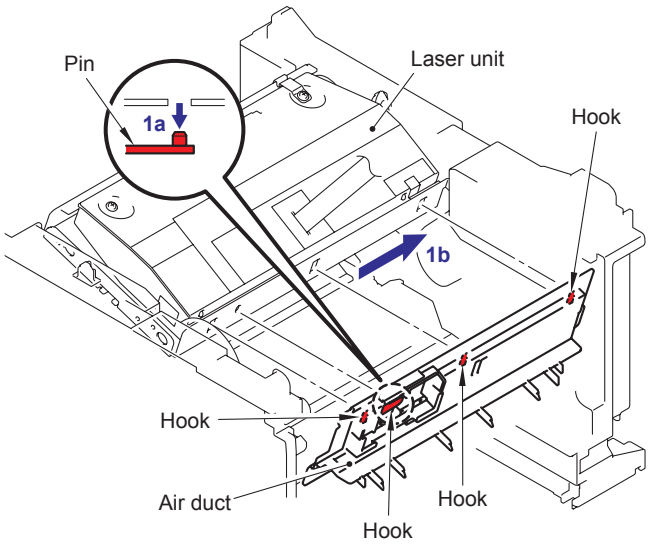

Fig. 5-90

(2) Remove the five cup S M3x6 Taptite screws.
(The left back screw has already remove at “8.13 Main Shield Plate ASSY“)

(3) Remove the Protective film from the Flat cable.

(4) Pull out the two Flat cable from the Core.

(5) Remove the Laser unit.

Note:
- Be careful not to lose the Protective film attached on the flat cable.
- Do not touch the Laser scanner window directly.

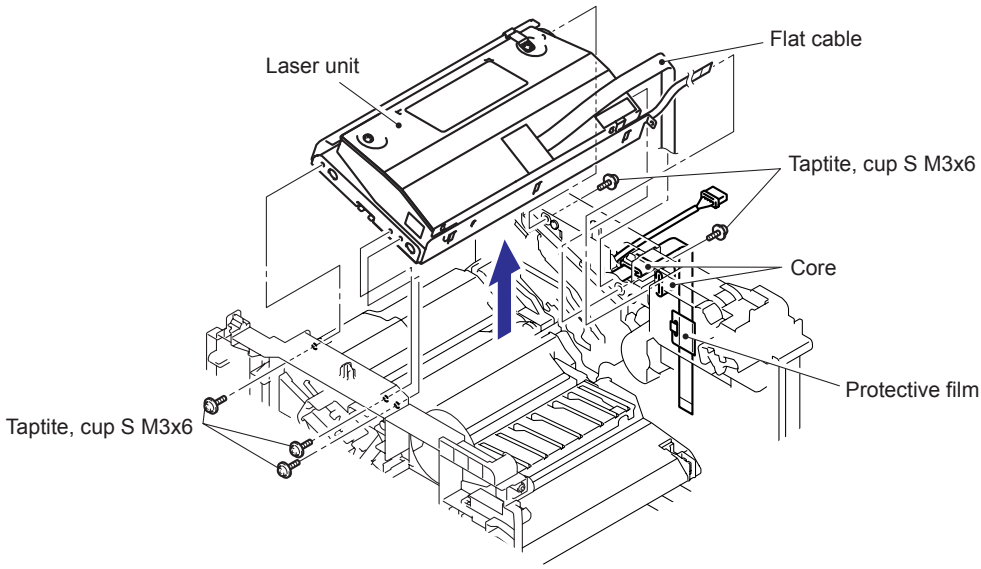

Fig. 5-91

Assembling Note:
- Before assembling the Laser unit, make sure put on the Core.

8.27 LVPS PCB Unit

(1) Turn the Printer upside down.

(2) Remove the five bind B M4x12 Taptite screws, and then remove the Base plate LV.

(3) Remove the Screw pan (S/P washer) M3.5x6 from the Base plate LV to remove the PS PCB unit terminal.

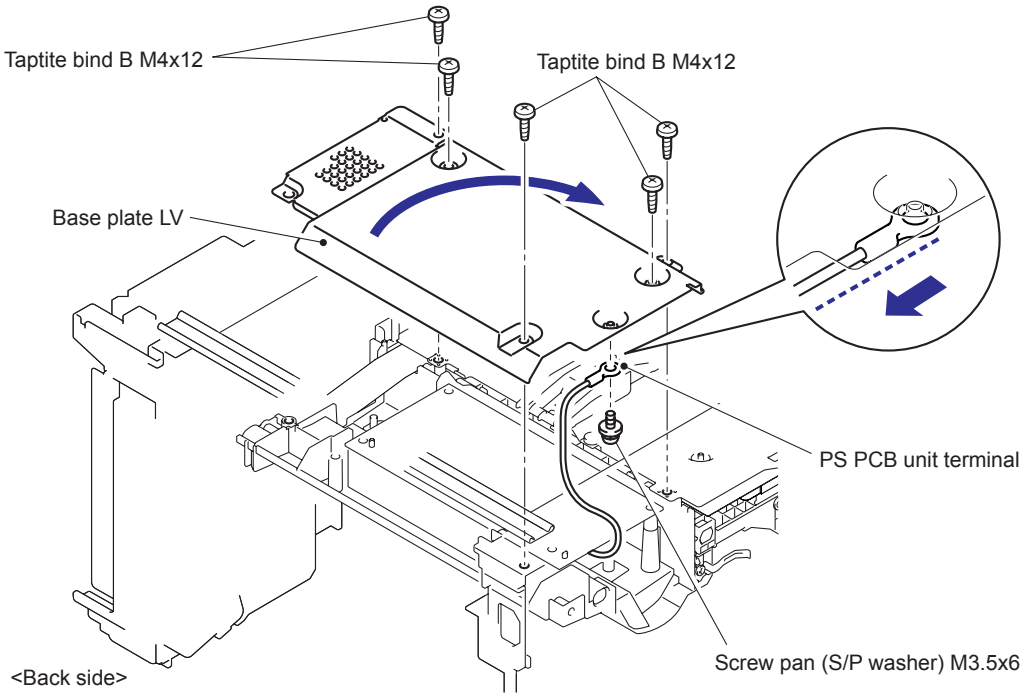

Fig. 5-92

Assembling Note:

- When assembling the Base plate LV, Direct the cable side of the PS PCB unit terminal to the backward (Fig. 5-92: To the direction of an arrow of the enlarged illustration.), and align parallel the PS PCB unit terminal with the side of the Base plate LV.

(4) Remove the two bind B M4x12 Taptite screws, and then remove the LV insulation sheet.

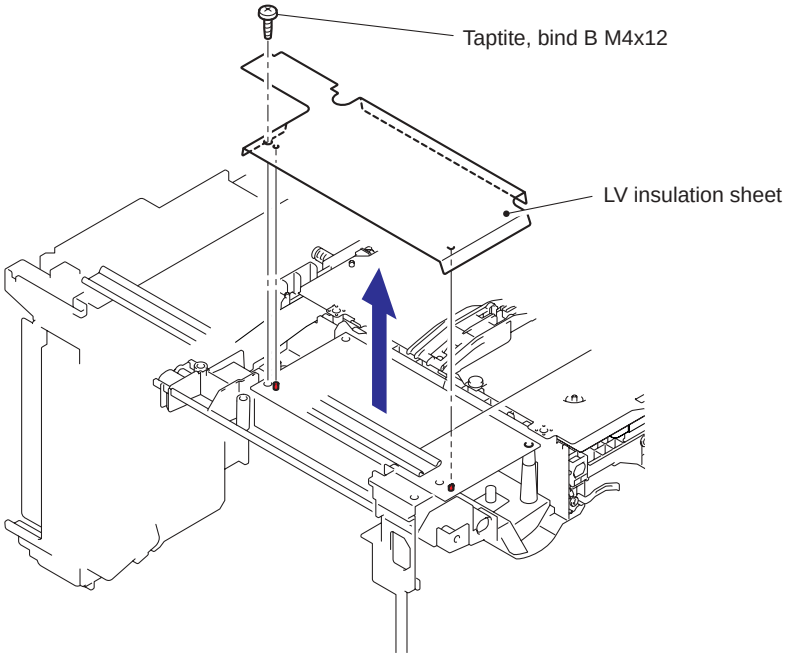

Fig. 5-93

(5) Remove the bind B M4x12 Taptite screw, and then remove the SW holder ASSY.

(6) Float the Fan motor 60 unit LV from the Frame R.

Note:

- Do not remove the Fan motor 60 unit LV at the above step.

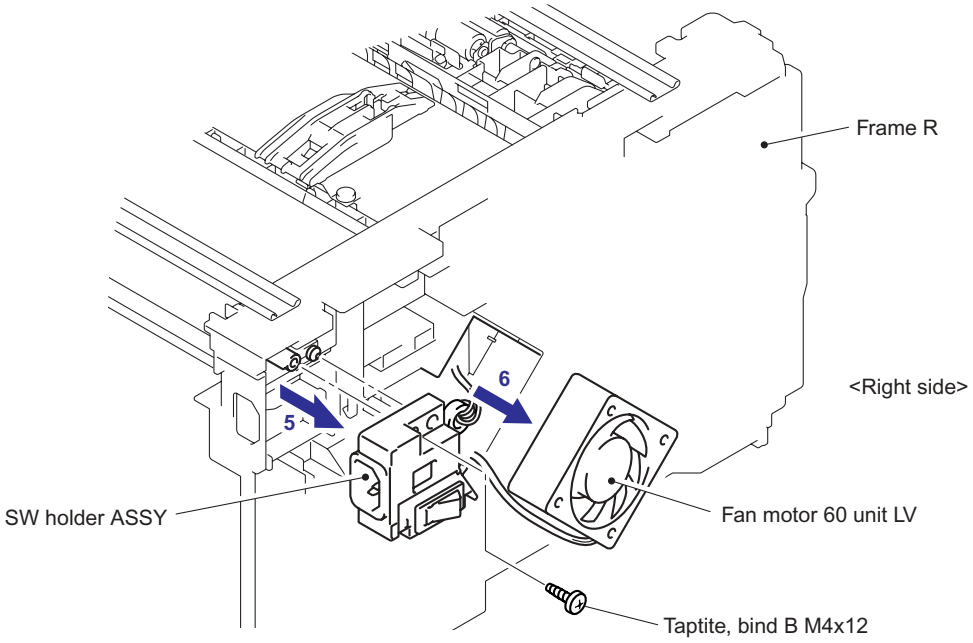

Fig. 5-94

Confidential

(7) Remove the bind B M3x10 Taptite screw, and remove the Safety louver.

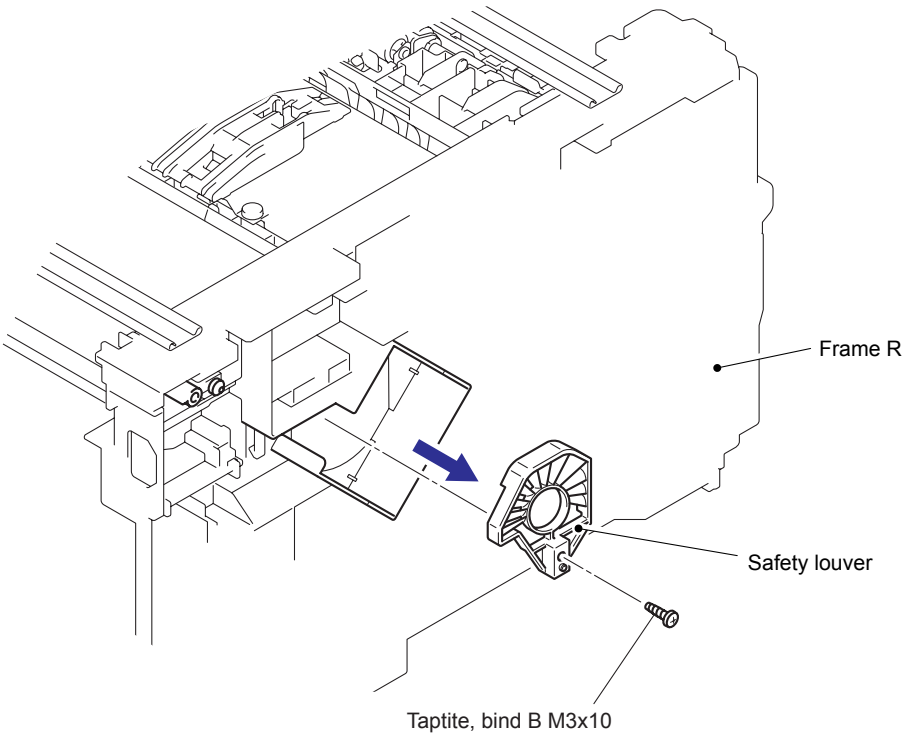

Fig. 5-95

(8) Remove the Inlet from the SW holder.

(9) Press the Hooks on both sides of the Power supply switch, pull out the Power supply switch to the direction of 9a and pull the wire out of the groove on the SW holder.

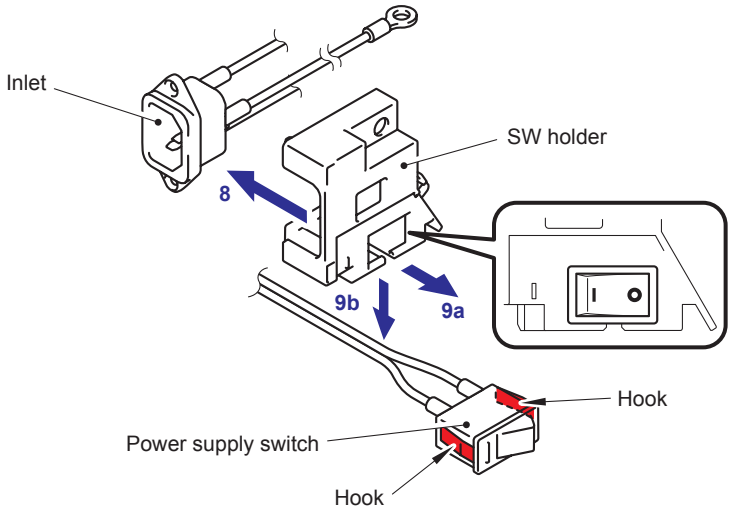

Fig. 5-96

Assembling Note:

- When assembling the power supply switch onto the SW holder, give attention to the direction of the switch.
- Align the " I " of the power supply switch with the " I " of the SW holder to attach the power supply switch

(10) Disconnect the harness of the fuser unit and power supply harness.

(11) Put each harness through the space where the fan 60 unit LV is assembled and remove the PS PCB unit.

(12) Remove the harness from the LVPS PCB unit.

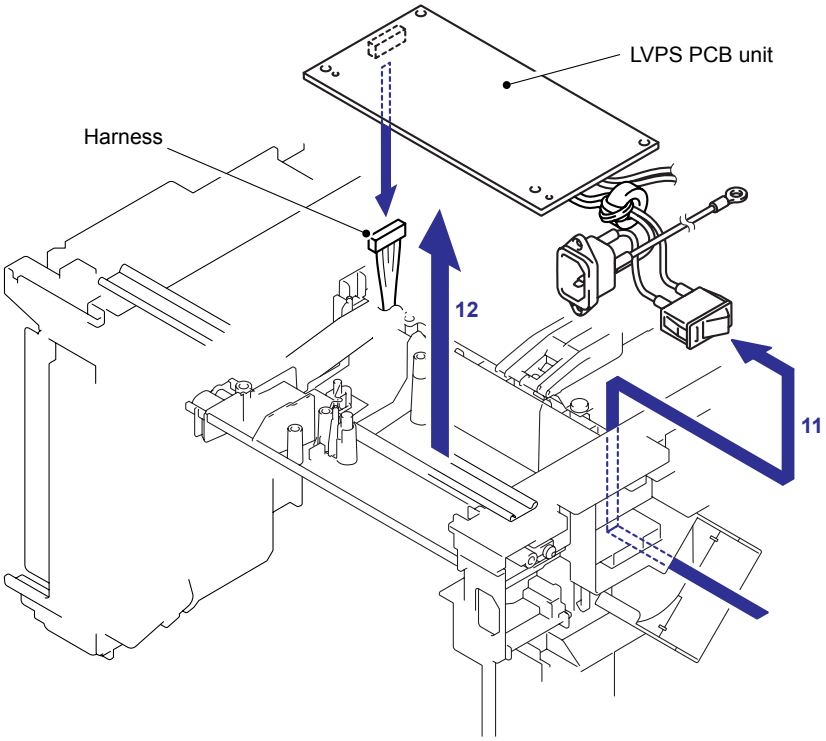

Fig. 5-97

8.28 High-Voltage PS PCB ASSY

(1) Remove the four bind B M4x12 Taptite screws, and then remove the Base plate HV.

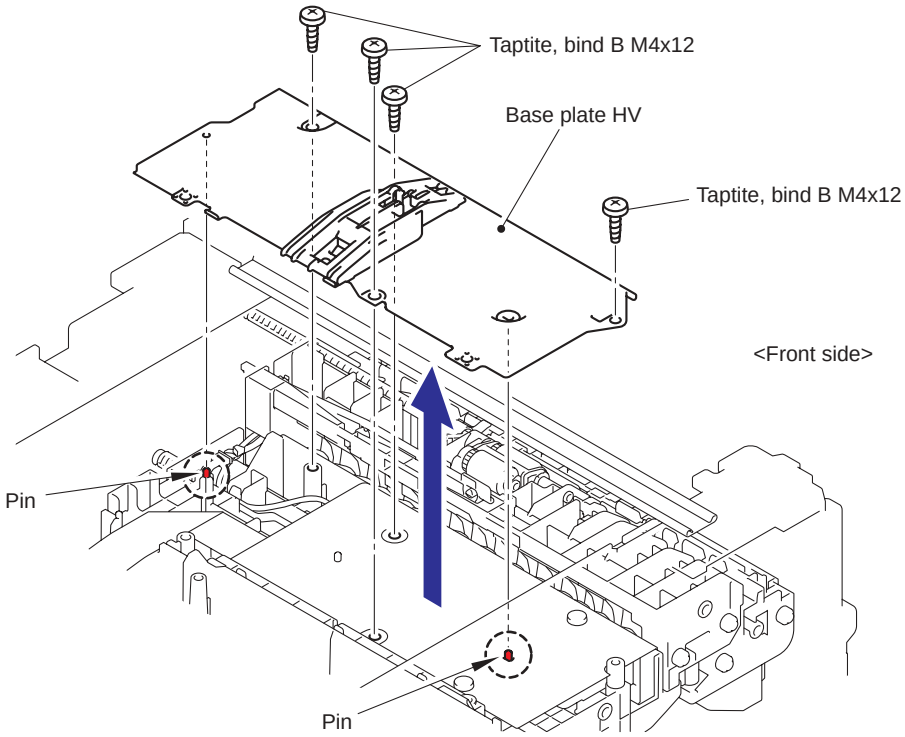

Fig. 5-98

(2) Remove the bind B M4x12 Taptite screw, and then remove the HV insulation sheet.

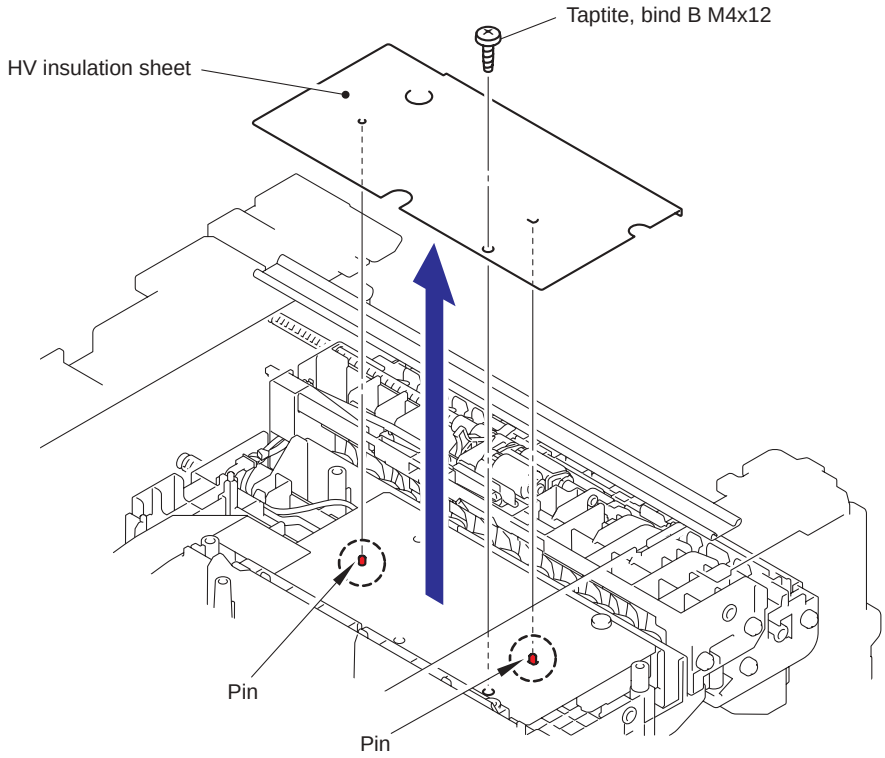

Fig. 5-99

Confidential

(3) Remove the bind B M4x12 Taptite screw, and then remove the High-voltage PS PCB ASSY.

(4) Disconnect the three connectors from the High-voltage PS PCB ASSY.

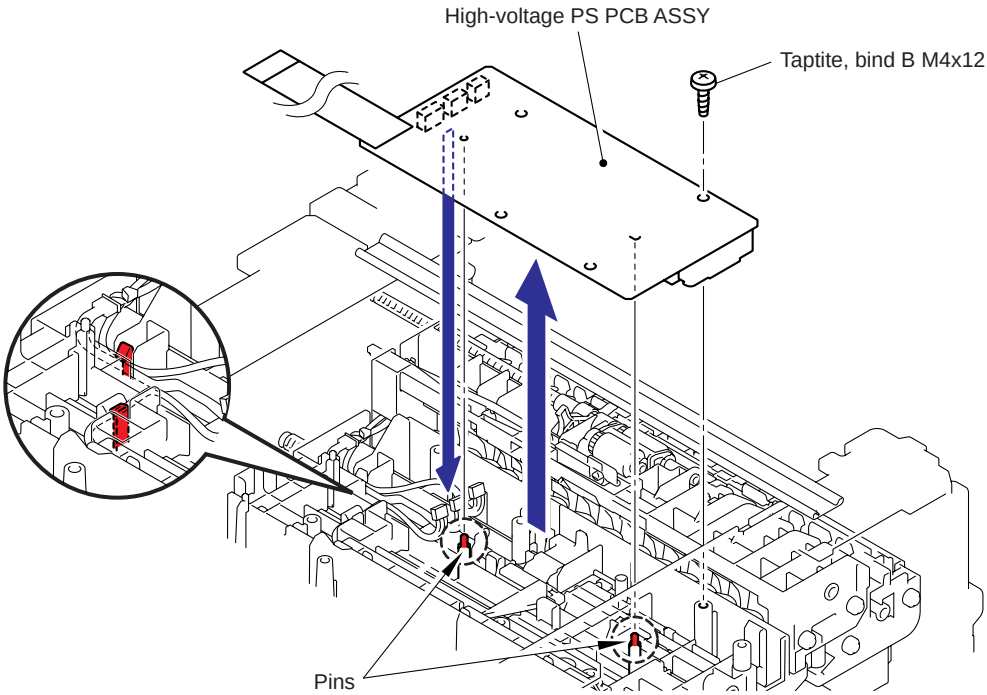

Fig. 5-100

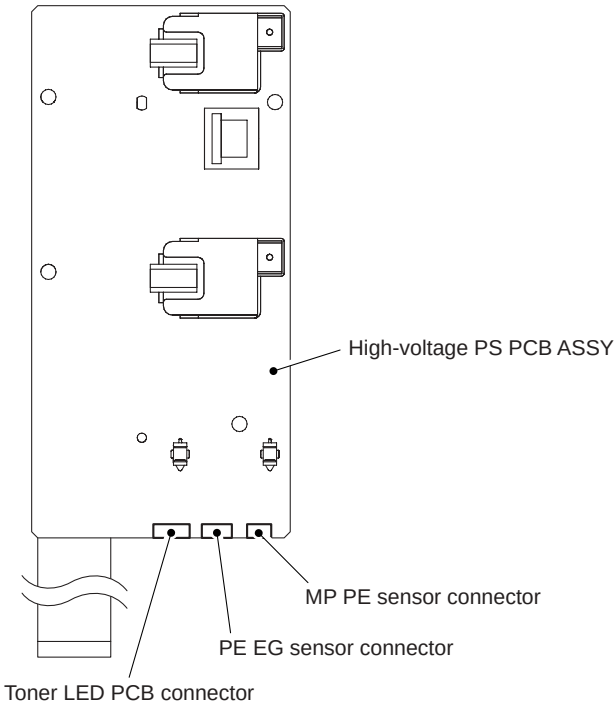

Fig. 5-101

8.29 Wireless LAN PCB (PCB T60H989 ASSY 04) (Wireless LAN model)

(1) Disconnect the connector of the Wireless PCB harness from Wireless LAN PCB.

(2) Remove the Wireless LAN PCB (PCB T60H989 ASSY 04) and Wireless LAN PCB holder from the Frame R.

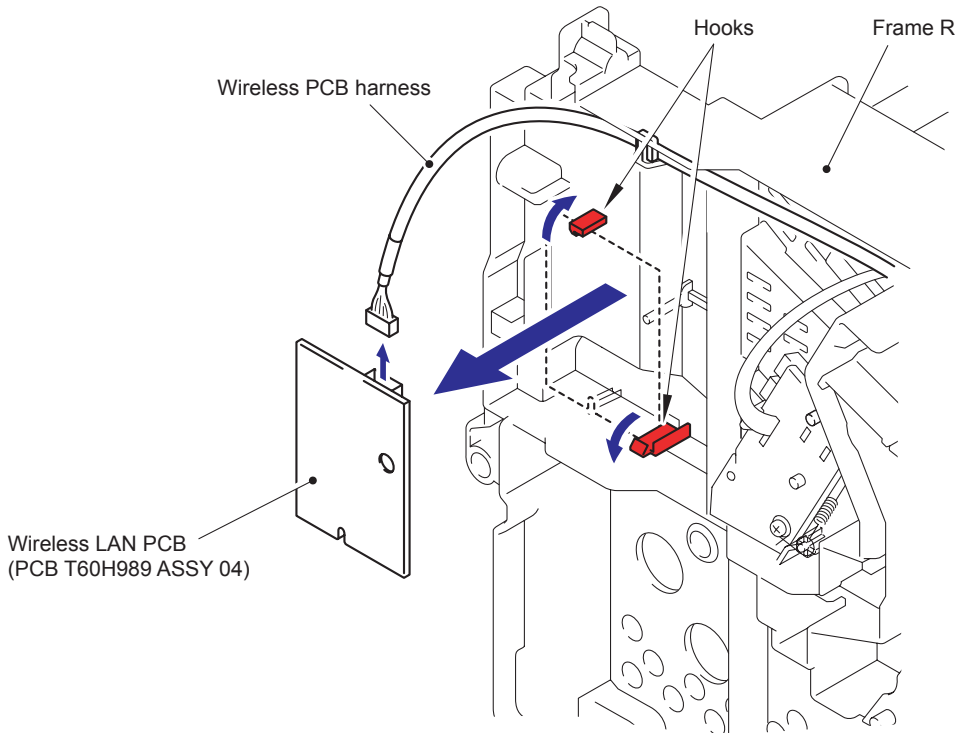

Fig. 5-102

Confidential

8.30 Toner LED PCB Unit ASSY

(1) Remove the pan B M3x8 Taptite screw, and remove the Regist ground spring.

(2) Remove the Toner LED PCB unit ASSY from the Frame R.

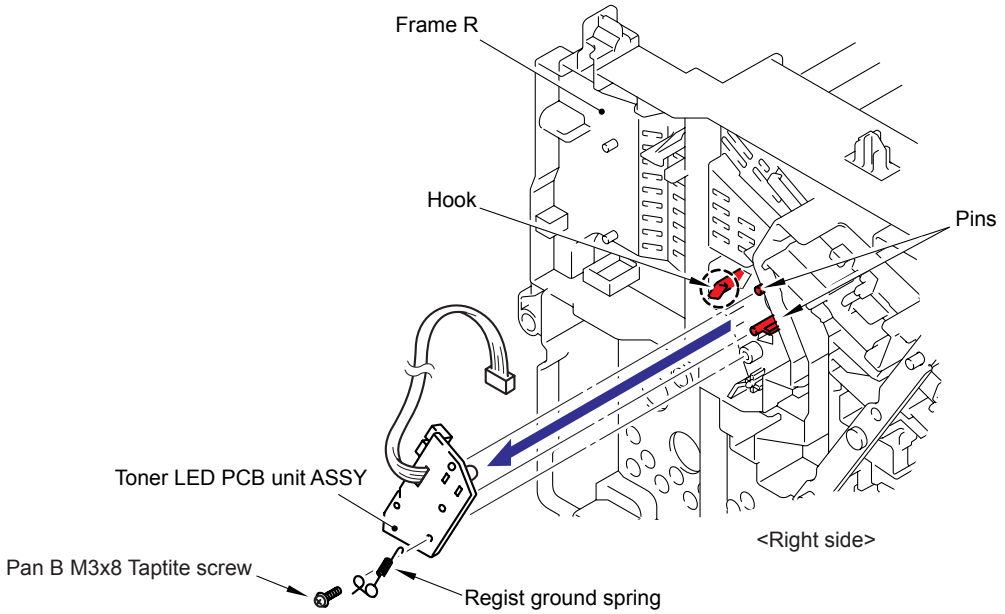

Fig. 5-103

Assembling Note:

- Hang the Hook of the Regist ground spring on the Pinch spring and hang the ring part of the Regist ground spring on the Pin, and secure the end part and the Toner LED PCB unit ASSY to the Frame R with the screw.

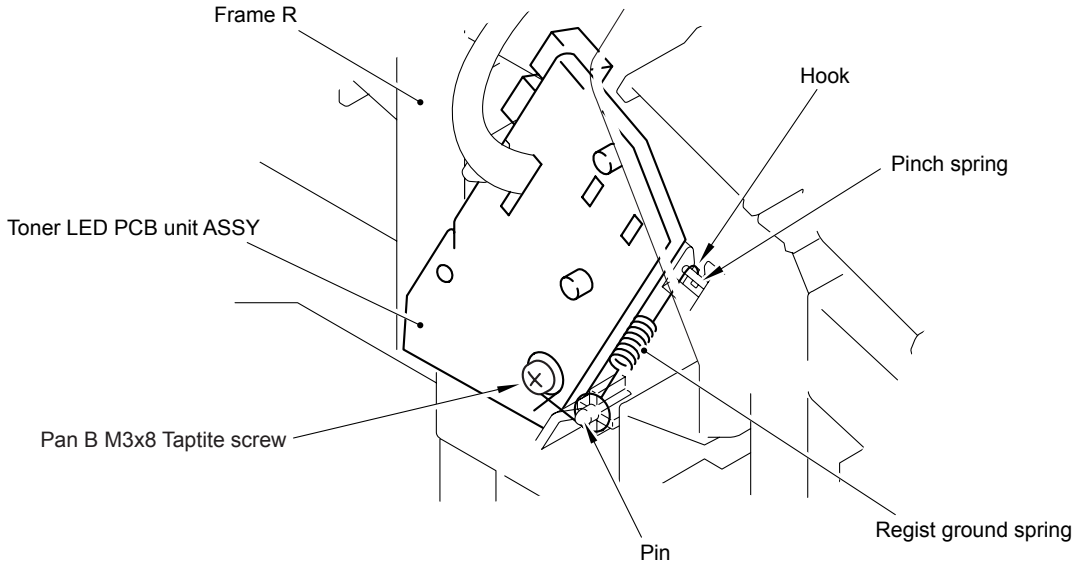

Fig. 5-104

(3) Disconnect the two connectors from the Toner LED PCB.

(4) Release the two Hooks to remove the LED holder from the Toner LED PCB.

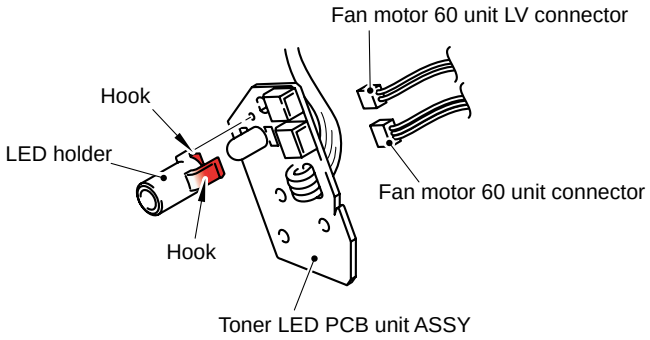

Fig. 5-105

8.31 Fan Motor 60 Unit

(1) Remove the Fan motor 60 unit from the Frame R.

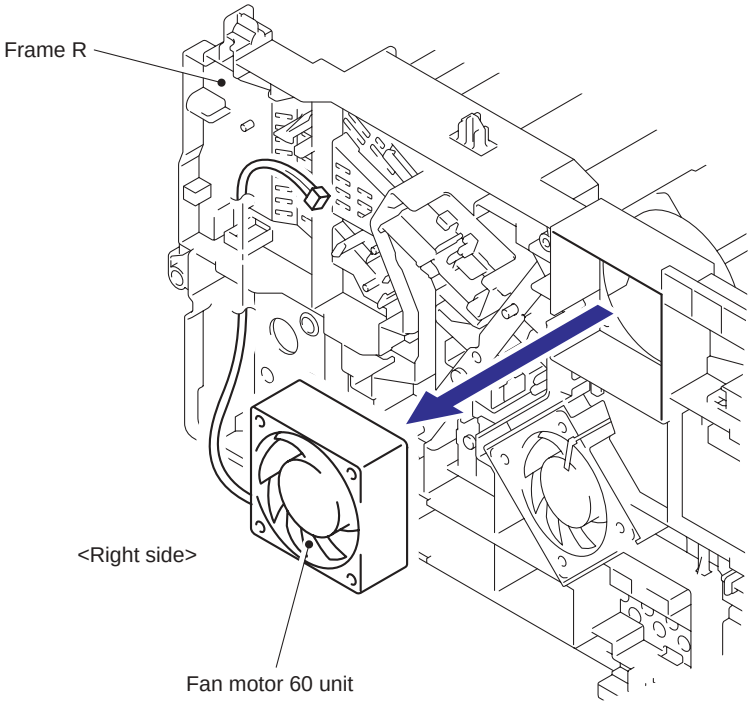

Fig. 5-106

8.32 Fan Motor 60 Unit LV

(1) Remove the Fan motor 60 unit LV from the Frame R.

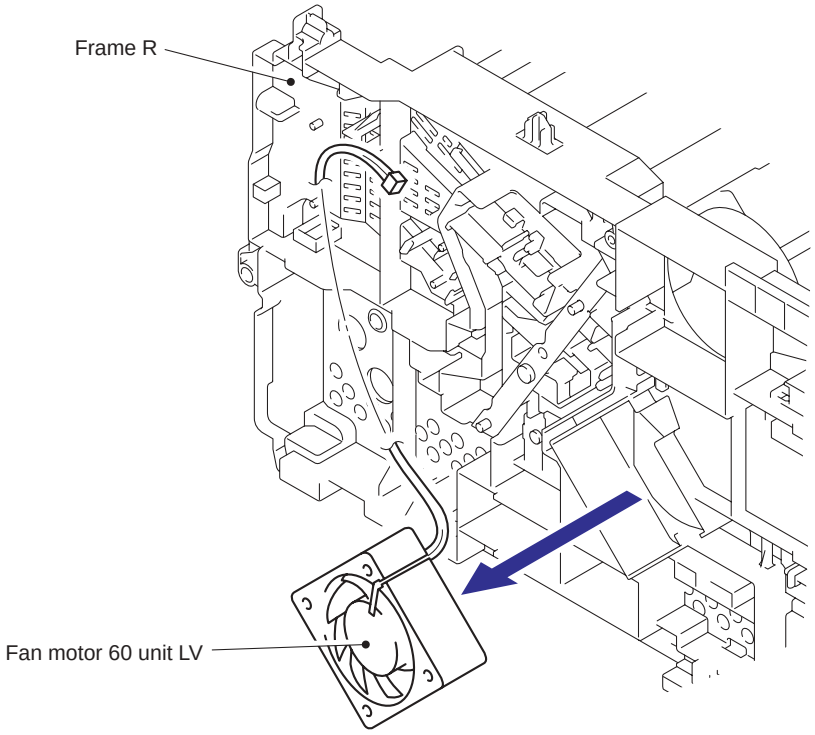

Fig. 5-107

Confidential

Note:
The procedure for disassembling the Frame L after "8.10 Top Cover Printed ASSY (LED model)" or "8.11 Top Cover Printed ASSY/Panel Plate Printed ASSY (LCD model)" is described below.

8.33 FRAME L ASSY

(1) Remove the Insulation sheet.

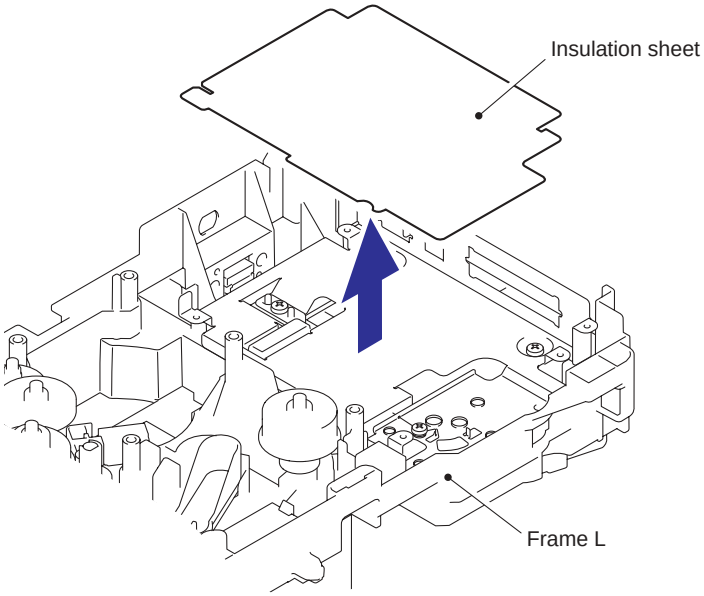

Fig. 5-108

(2) Remove the two bind B M4x12 Taptite screws, and then remove the Plate.

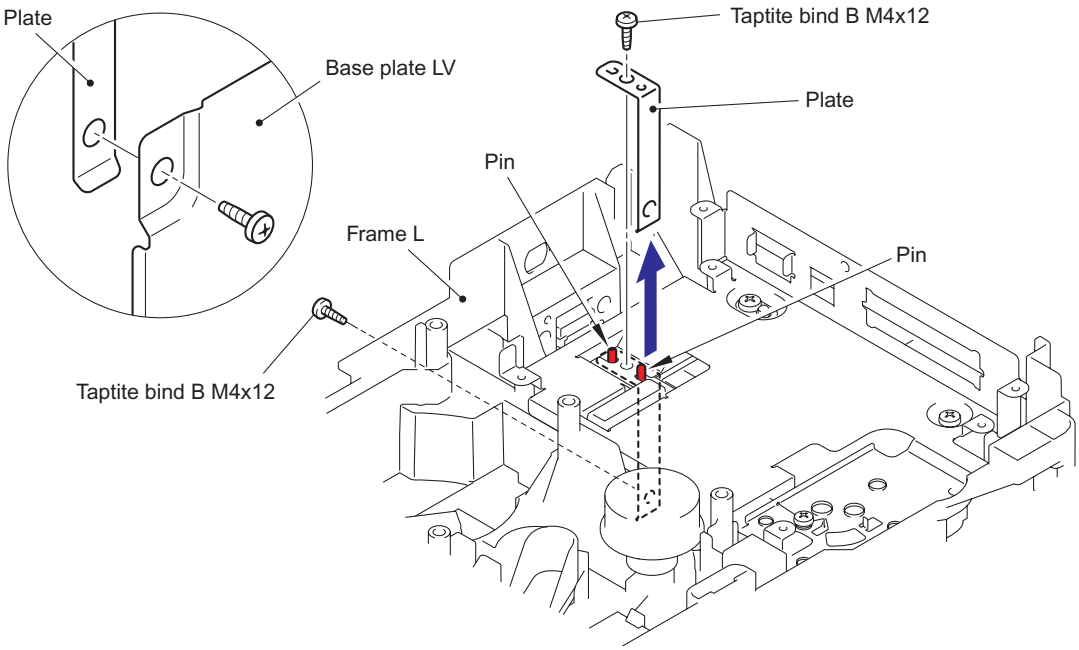

Fig. 5-109

Confidential

(3) Remove the Gear 23, Gear 17 (white), Gear 17 (black) and Gear 20.

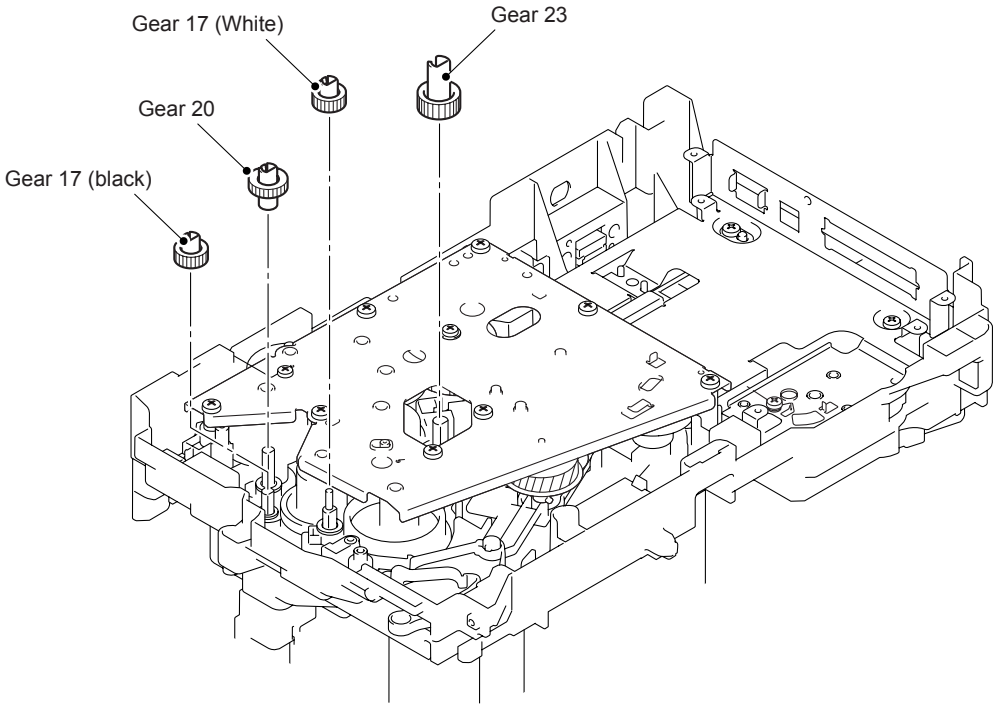

Fig. 5-110

(4) Remove the six bind B M4x12 Taptite screws and the three cup S M3x6 Taptite screws.

(5) Remove the Frame L.

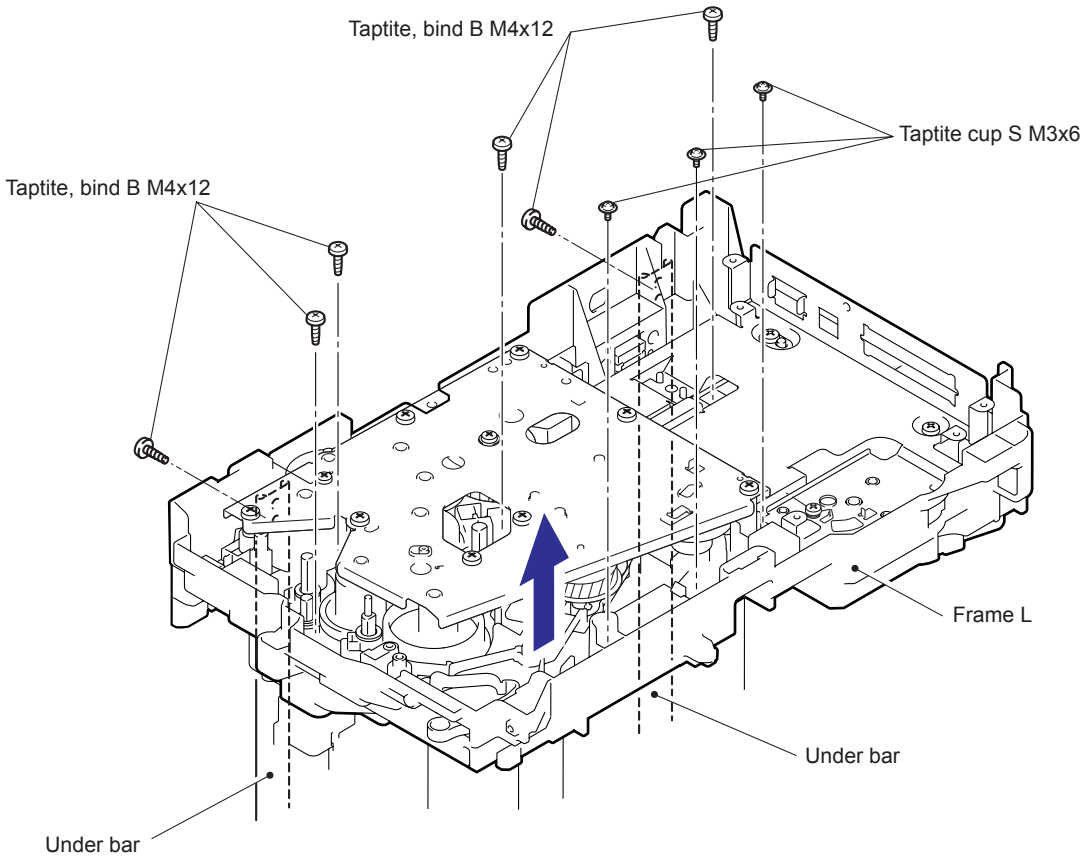

Fig. 5-111

Confidential

8.34 MP Unit

(1) Cut the Binder bundling the harnesses with nippers.

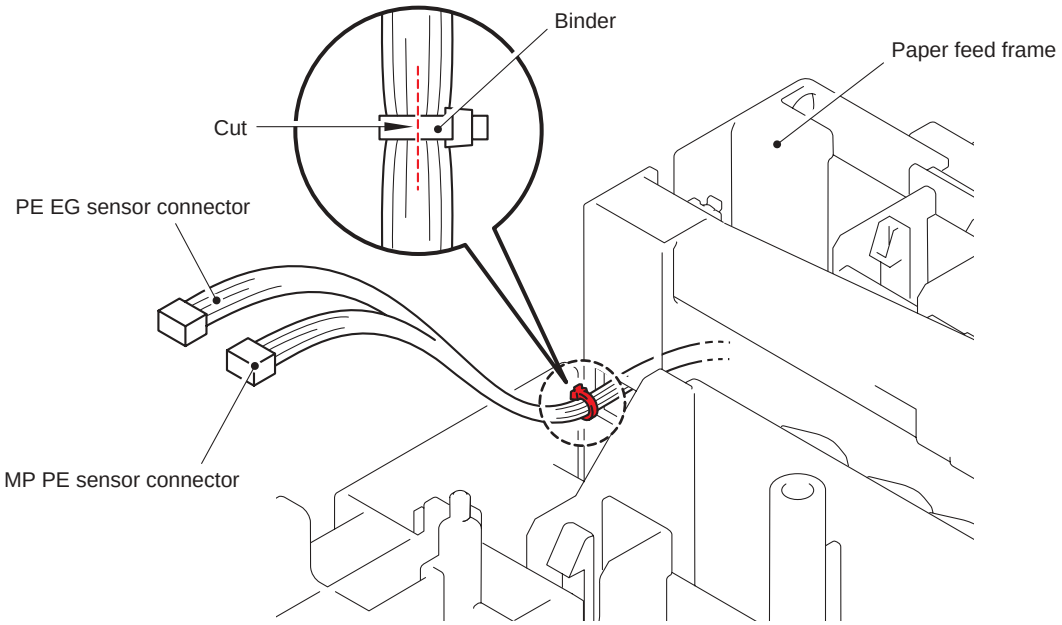

Fig. 5-112

(2) Remove the two bind B M3x8 Taptite screws.

(3) Lift up the back side of the MP feed frame and pull up the MP feed frame to remove.

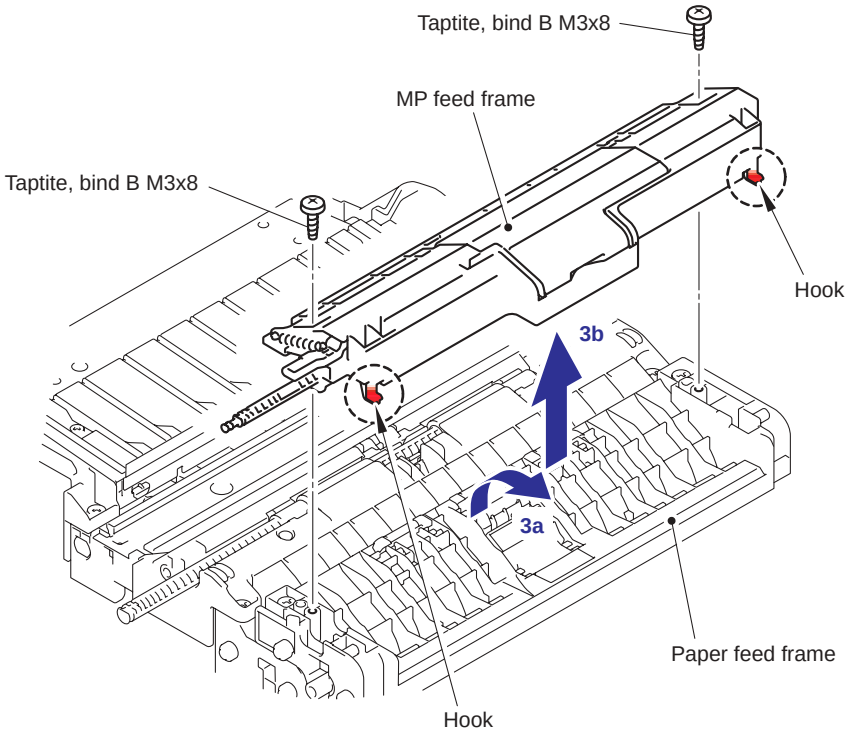

Fig. 5-113

Confidential

(4) Open the MP feed frame cover.

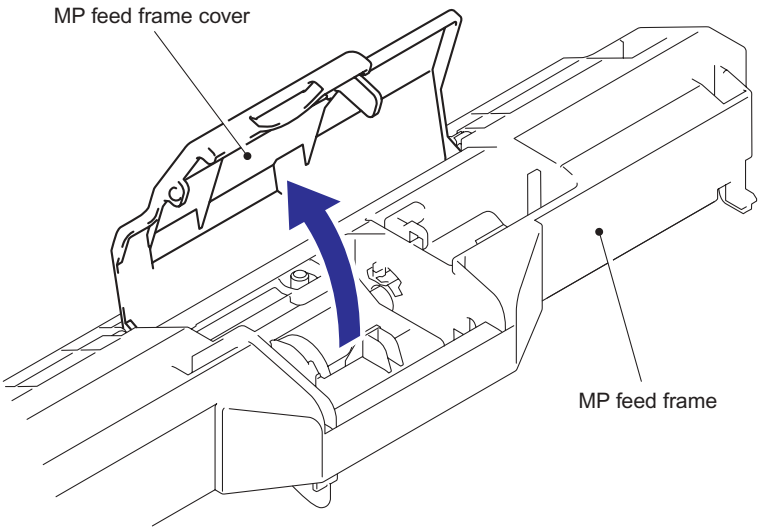

Fig. 5-114

(5) Release the Hook to remove the Holder bearing MP from the MP feed frame.

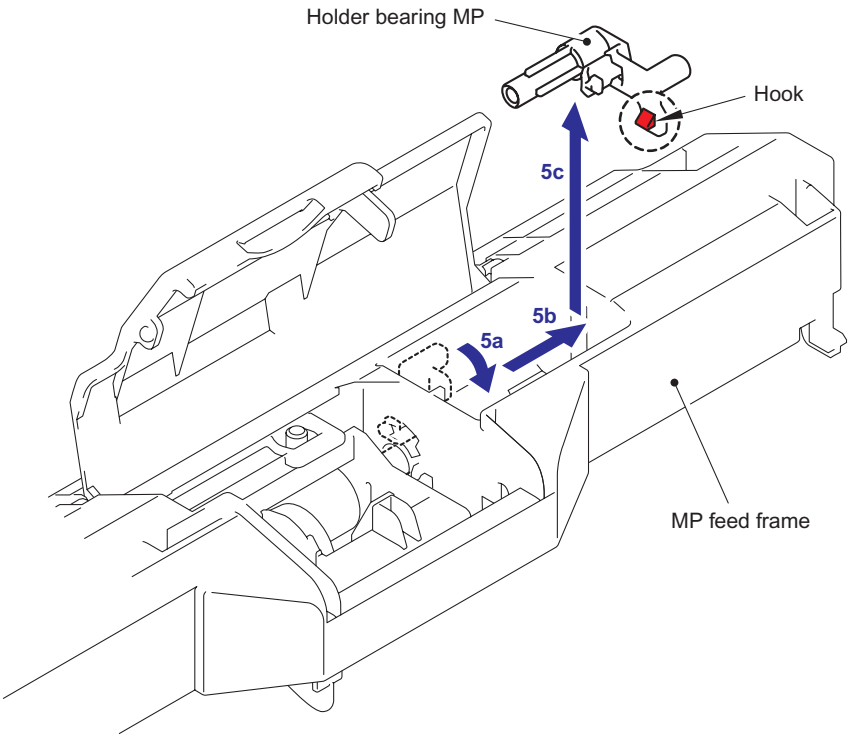

Fig. 5-115

Confidential

(6) Slide the MP roller holder ASSY to the direction of 6a and pull it down to remove.

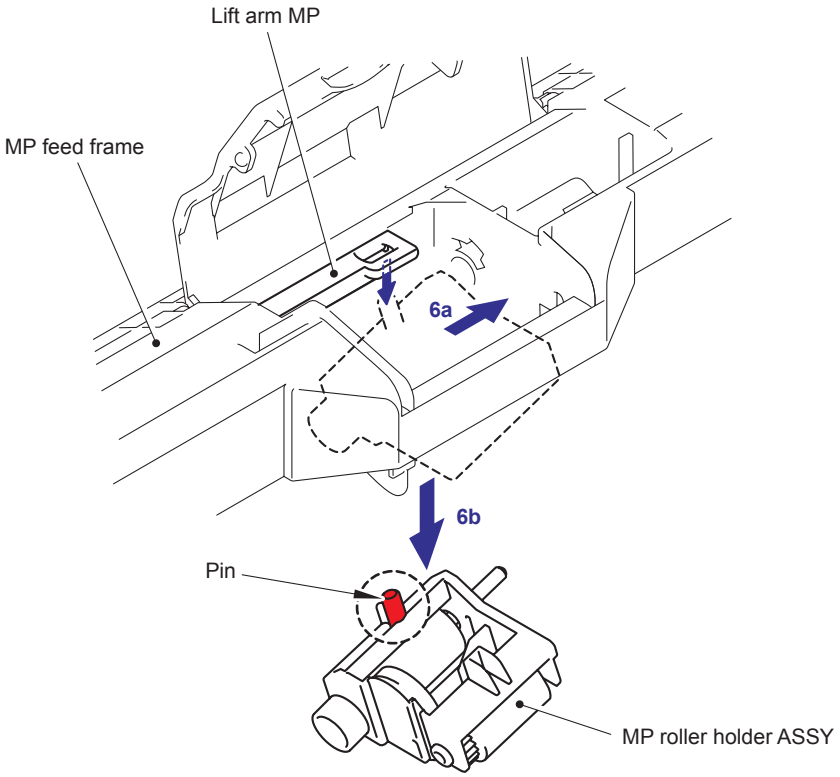

Fig. 5-116

(7) Turn the MP feed frame upside down.

(8) Slide the PE actuator MP B2 to the direction of 8b while pressing the Hook to the direction of 8a, and pull it up to remove.

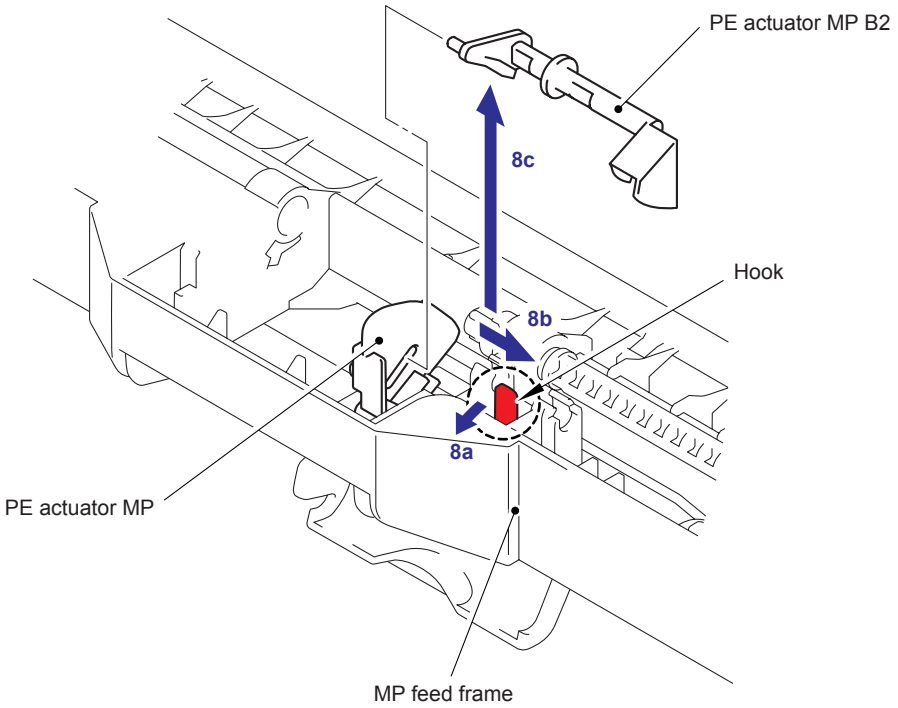

Fig. 5-117

Confidential

(9) Turn the PE actuator MP to the direction of 9a and pull it up to remove.

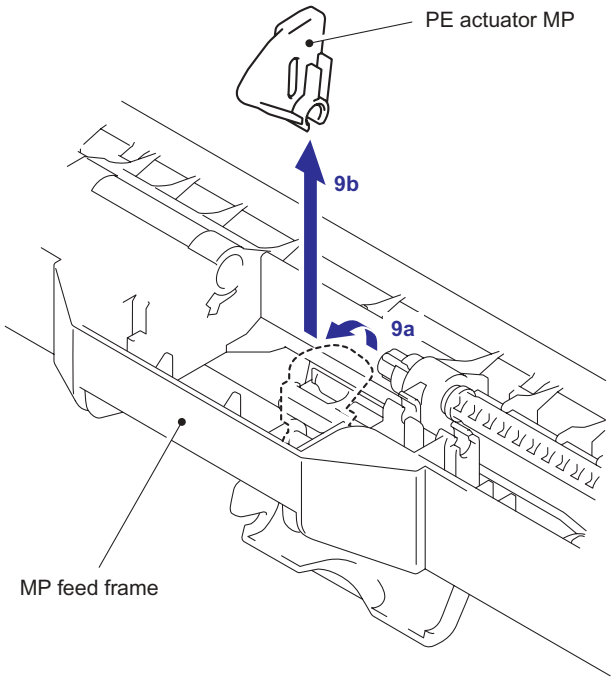

Fig. 5-118

(10) Remove the bind B M3x8 Taptite screw, and then remove the MP PE sensor ASSY.

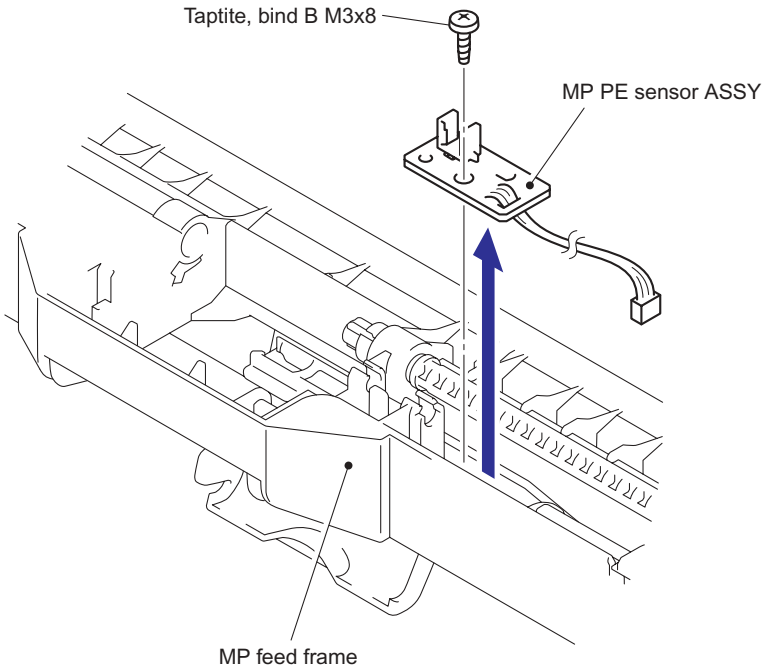

Fig. 5-119

Confidential

(11) Turn the back side of the Separation pad ASSY MP to the direction of the arrow 11a and pull it up to the direction 11b to remove.

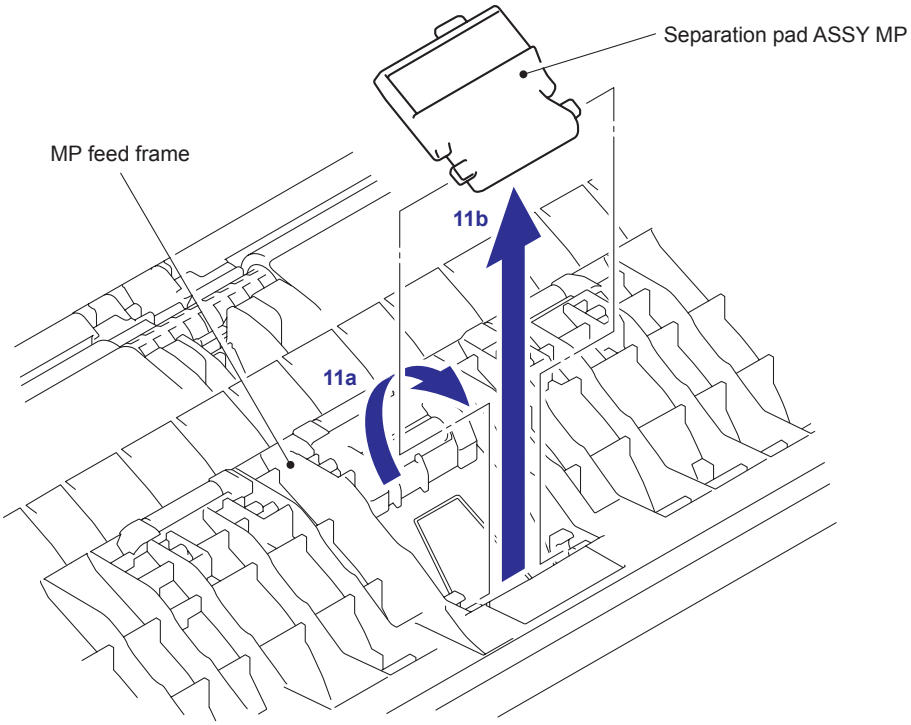

Fig. 5-120

(12) Remove the MP separation spring from the MP feed frame.

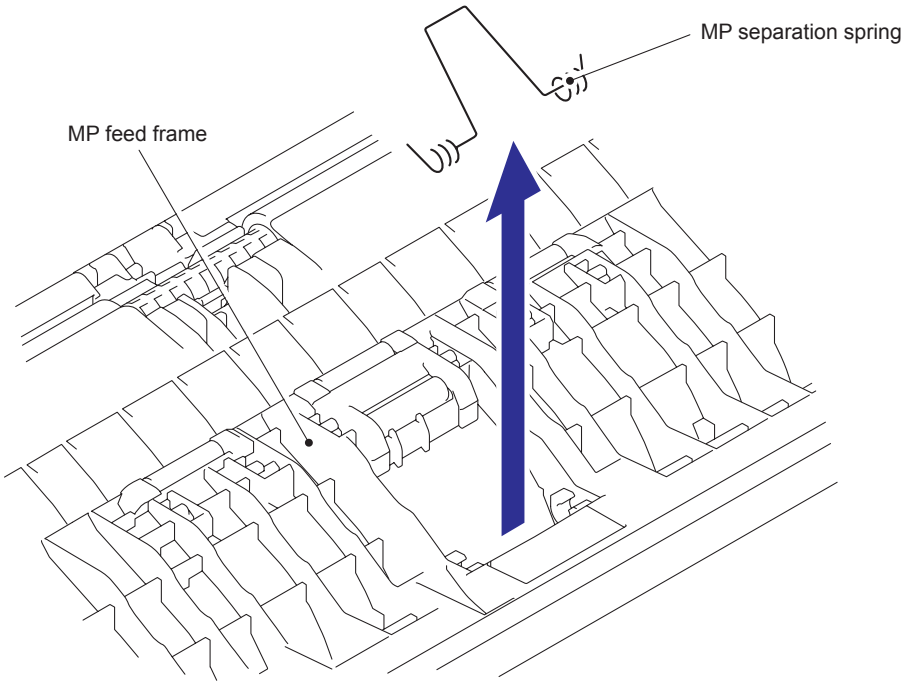

Fig. 5-121

Confidential

Assembling Note:

- When assembling the MP separation spring, ensure that its direction is correct referring to the figure below.

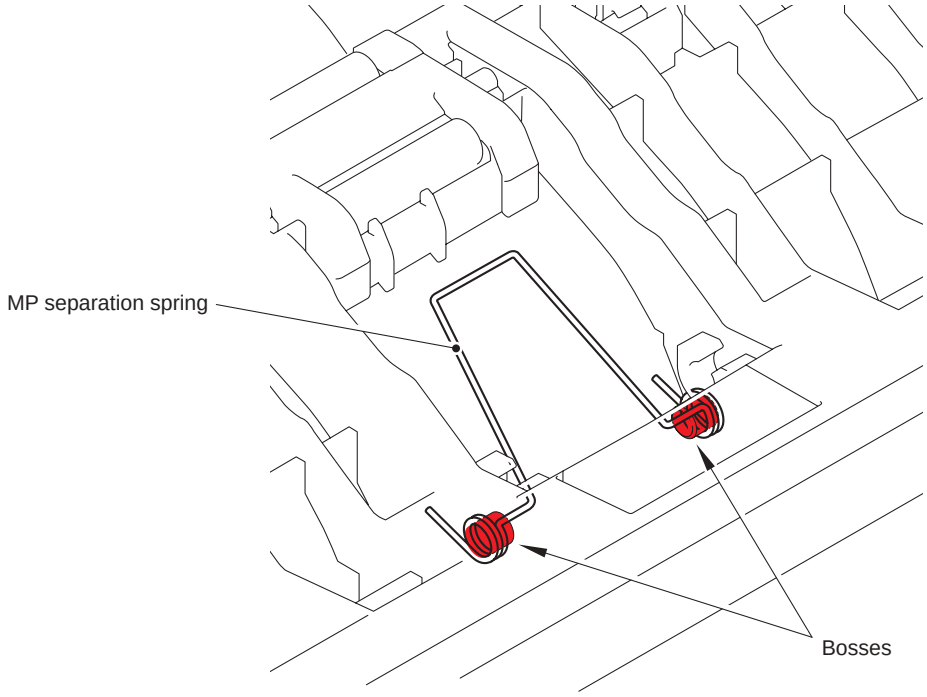

Fig. 5-122

8.35 Regist Actuator Rear/Regist Actuator Spring

(1) Turn the Paper feed frame upside down.

(2) Release the Hook A of the Actuator cover to pull up the Actuator cover to remove.

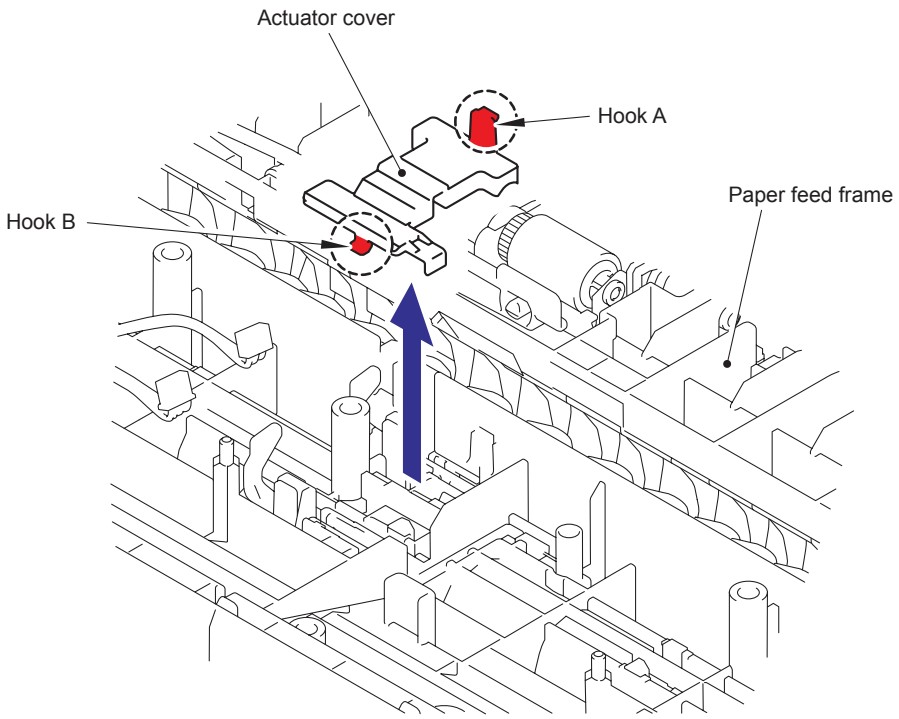

Fig. 5-123

(3) Slide the Regist actuator rear to the direction of 3b while pressing the Hook to the direction of 3a and pull up the Regist actuator rear to remove. Then, remove the Regist actuator spring from the Regist actuator rear.

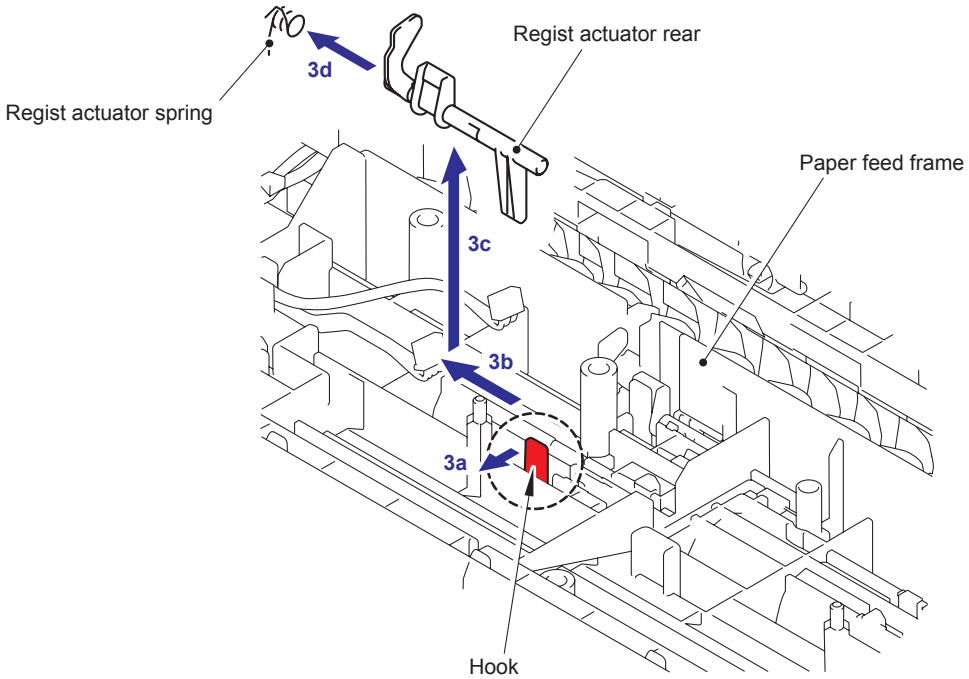

Fig. 5-124

Confidential

Assembling Note:

- When assembling the Regist actuator spring, ensure that its direction is correct referring to the figure below.

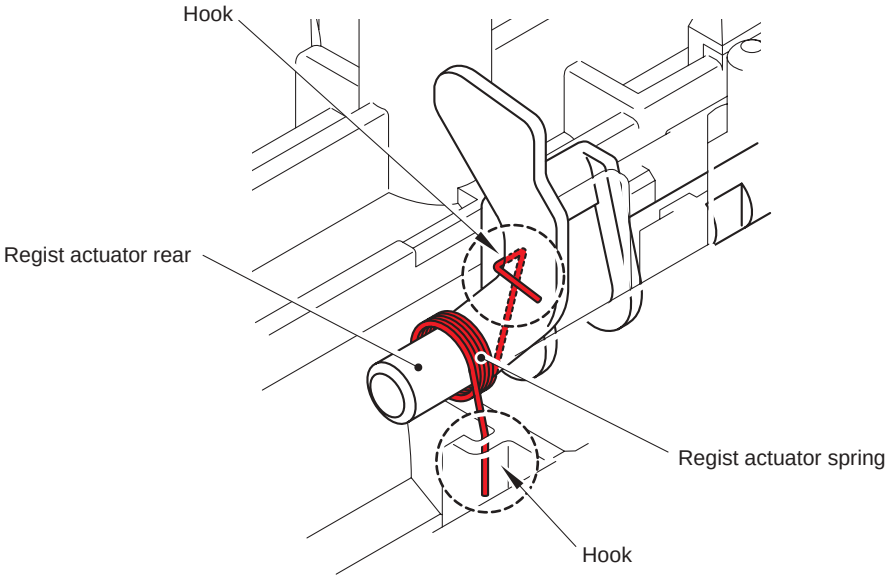

Fig. 5-125

Confidential

8.36 Regist Actuator Front/Regist Actuator Spring

(1) Slide the Regist actuator front to the direction of 1b while pressing the Hook to the direction of 1a and pull up the Regist actuator front to remove. Then, remove the Regist actuator spring from the Regist actuator front.

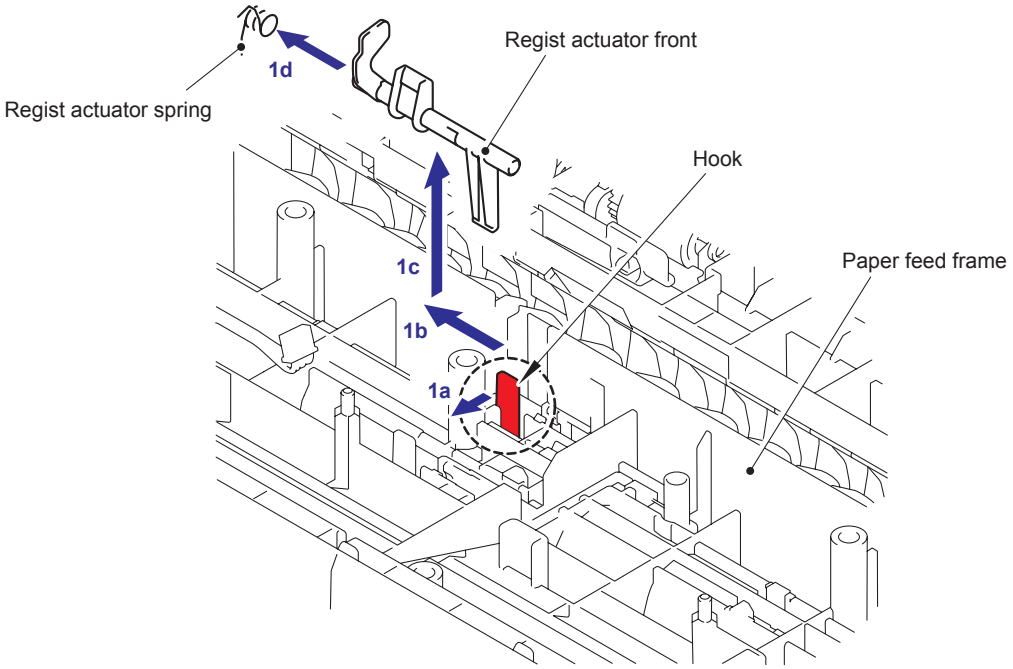

Fig. 5-126

Assembling Note:

- When assembling the Regist actuator spring, ensure that its direction is correct referring to the figure below.

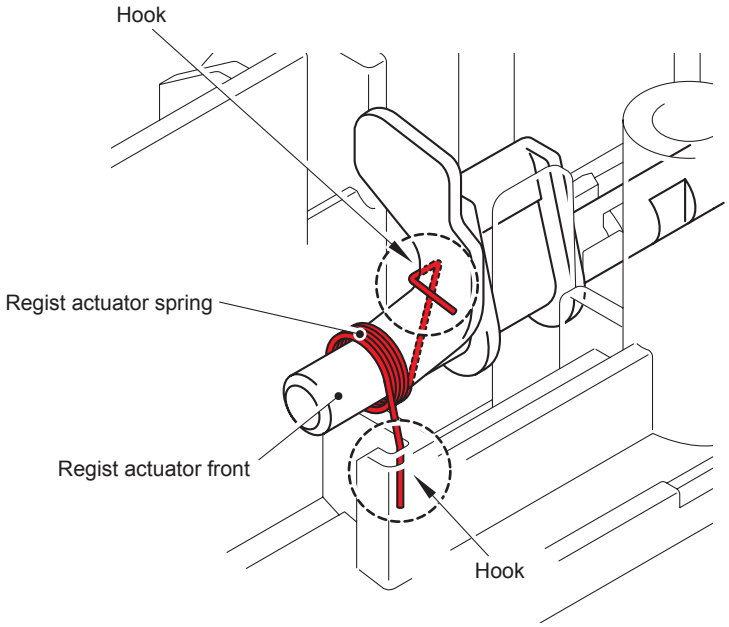

Fig. 5-127

Confidential

8.37 Roller Holder ASSY

(1) Push the Lift arm to the direction of 1a and pull out the pin of the Roller holder ASSY. Then, turn the Roller holder ASSY to the direction of 1b.

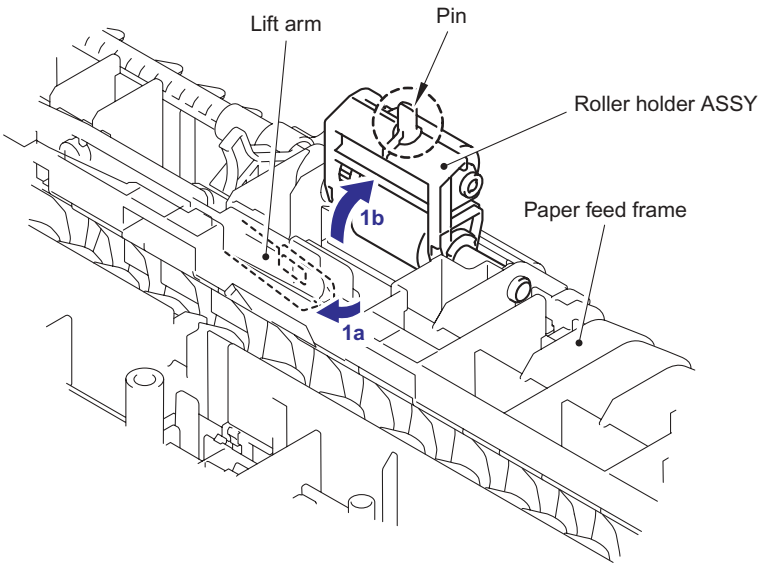

Fig. 5-128

(2) Slide the Roller holder ASSY to the direction of 2a. Then, lift up the gear side of the Roller holder ASSY to the direction of 2b and pull it out to the direction of 2c to remove.

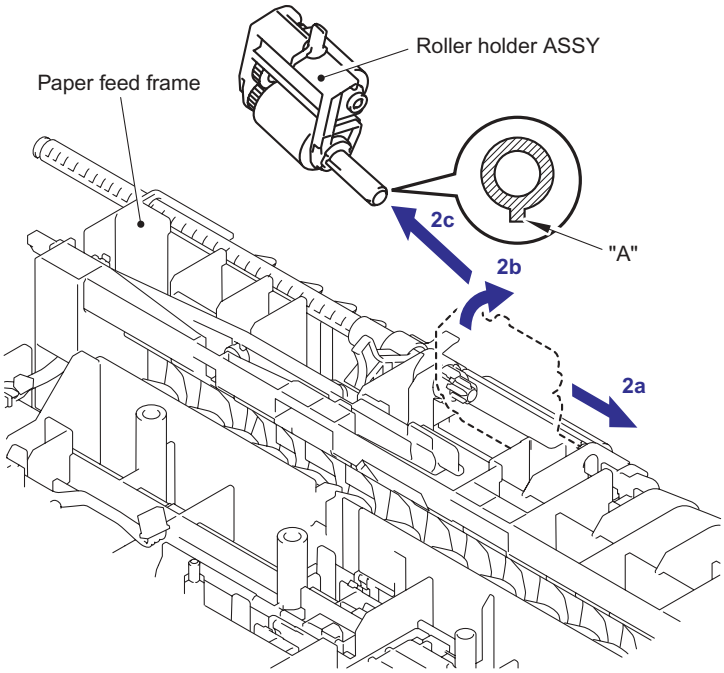

Fig. 5-129

Assembling Note:

- When assembling the roller holder ASSY, align the section "A" on the shaft of the roller holder ASSY with the hole on the paper feed frame.

Confidential

8.38 PE Actuator/Edge Actuator/Edge Actuator Spring

(1) Remove the Edge actuator spring.

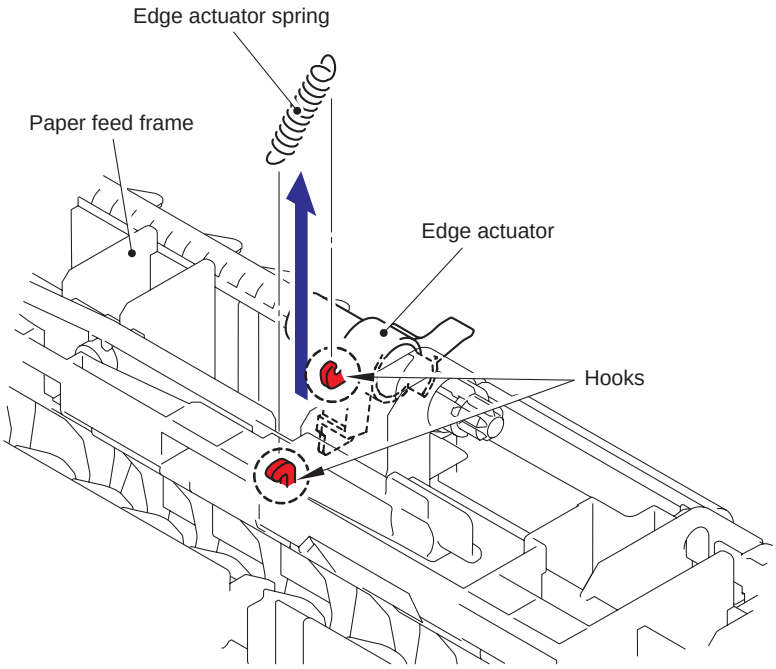

Fig. 5-130

(2) Release the Hook and remove the Separation R shaft bearing.

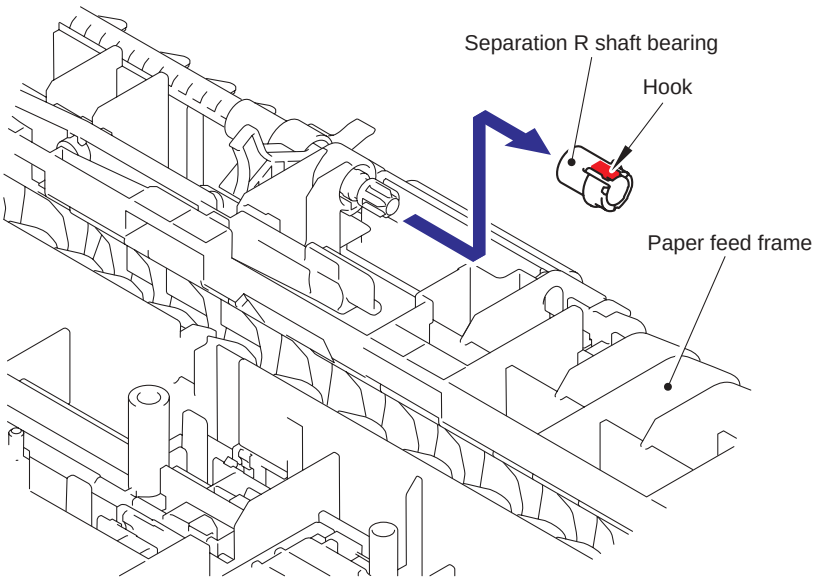

Fig. 5-131

Confidential

(3) Pull out the Separation roller drive shaft to the direction of the arrow and remove the Edge actuator and PE actuator.

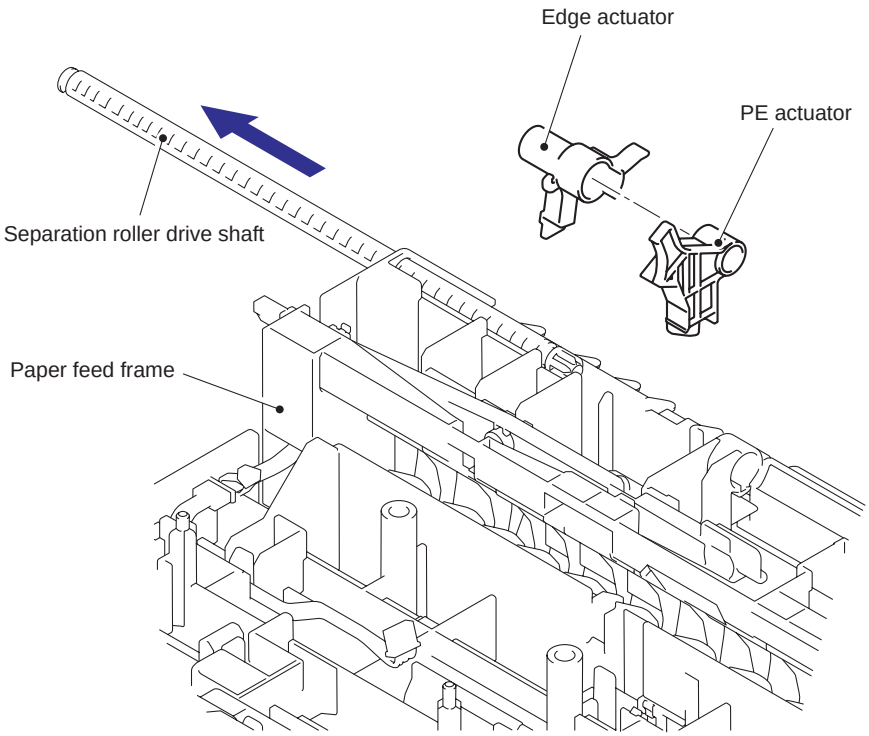

Fig. 5-132

Confidential

8.39 PE EG Sensor ASSY

(1) Remove the three bind B M4x12 Taptite screws, and remove the MP frame.

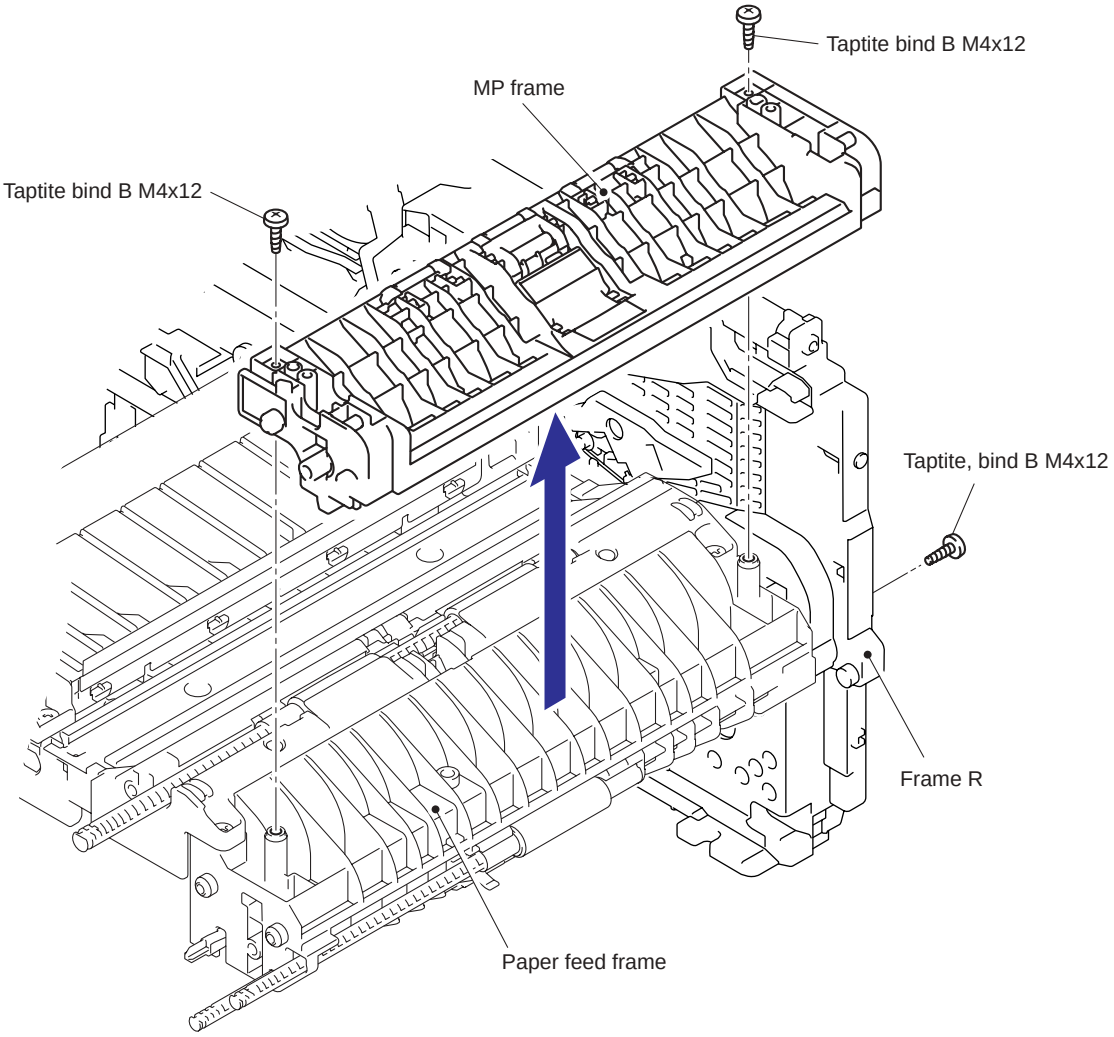

Fig. 5-133

(2) Remove the bind B M3x8 Taptite screw, and then remove the PE EG sensor ASSY.

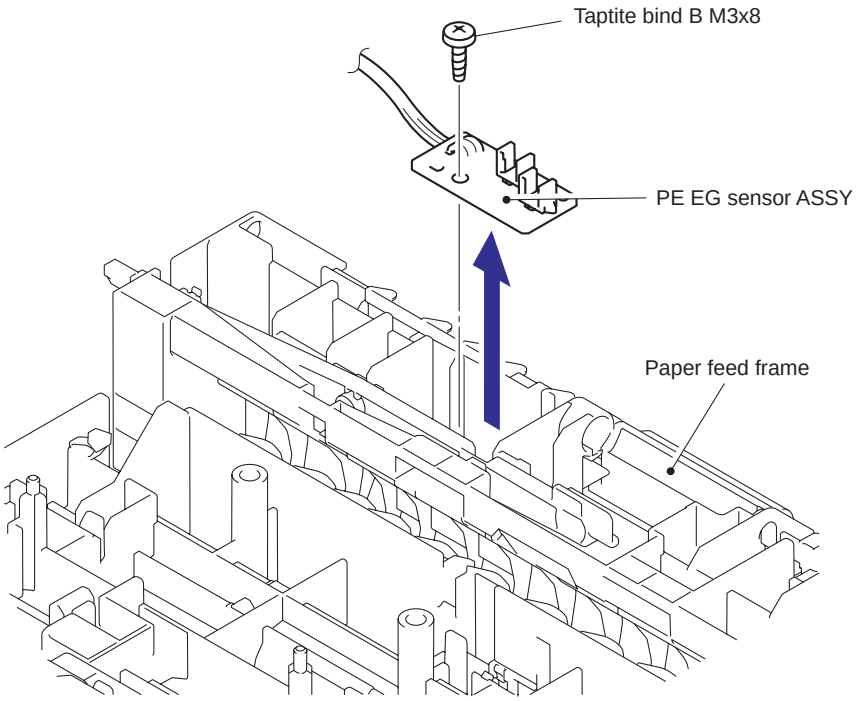

Fig. 5-134

9. DISASSEMBLY PROCEDURE (LT-5300)

9.1 Paper Tray

(1) Pull out the Paper tray from the LT-5300.

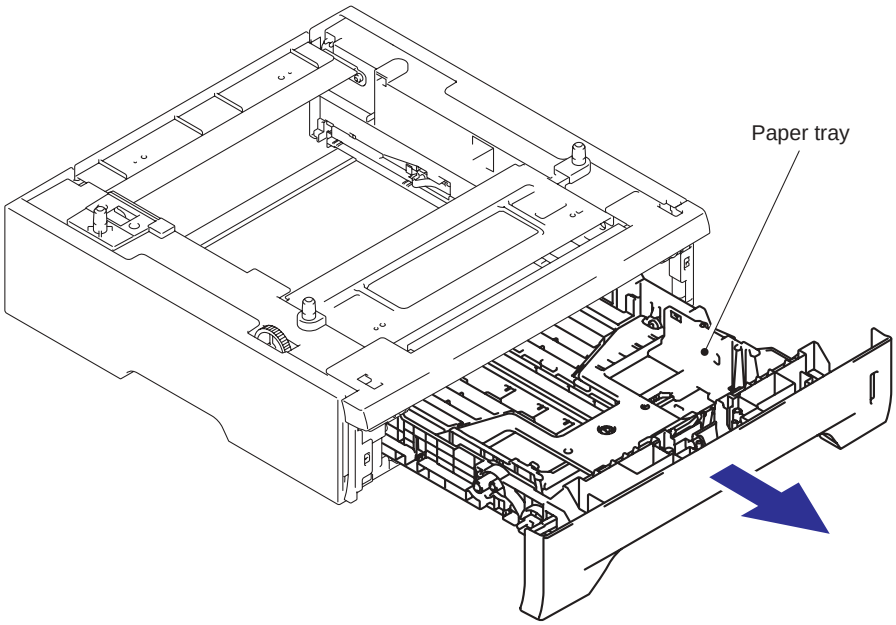

Fig. 5-135

(2) Pull up the back side of the Separation pad ASSY.

(3) Push the Hooks provided on both sides of the Separation pad ASSY inwards.

(4) Pull up the Separation pad ASSY.

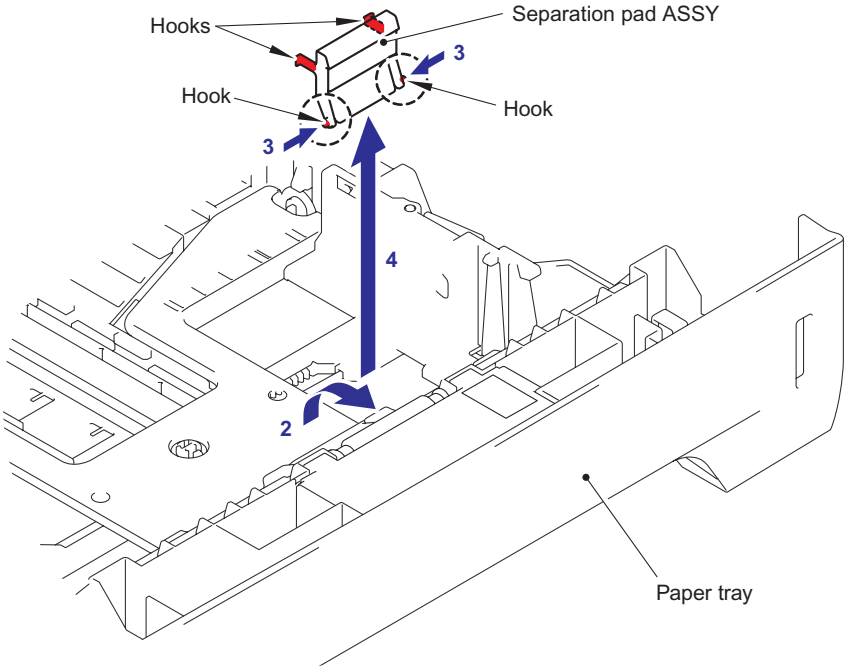

Fig. 5-136

Confidential

(5) Remove the Separation pad spring.

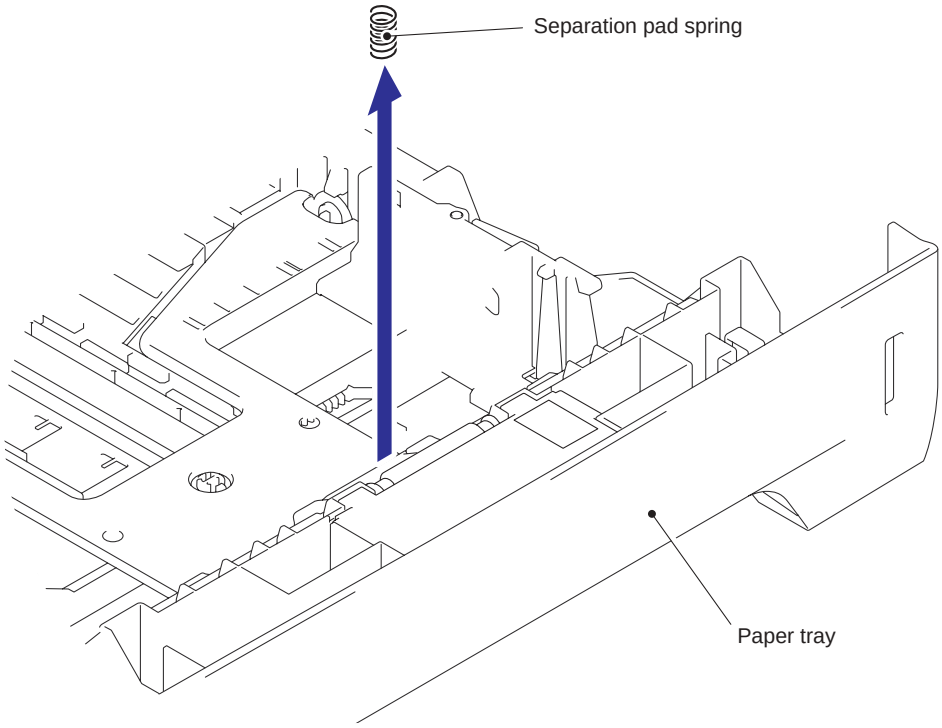

Fig. 5-137

(6) Remove the Lift gear 46.

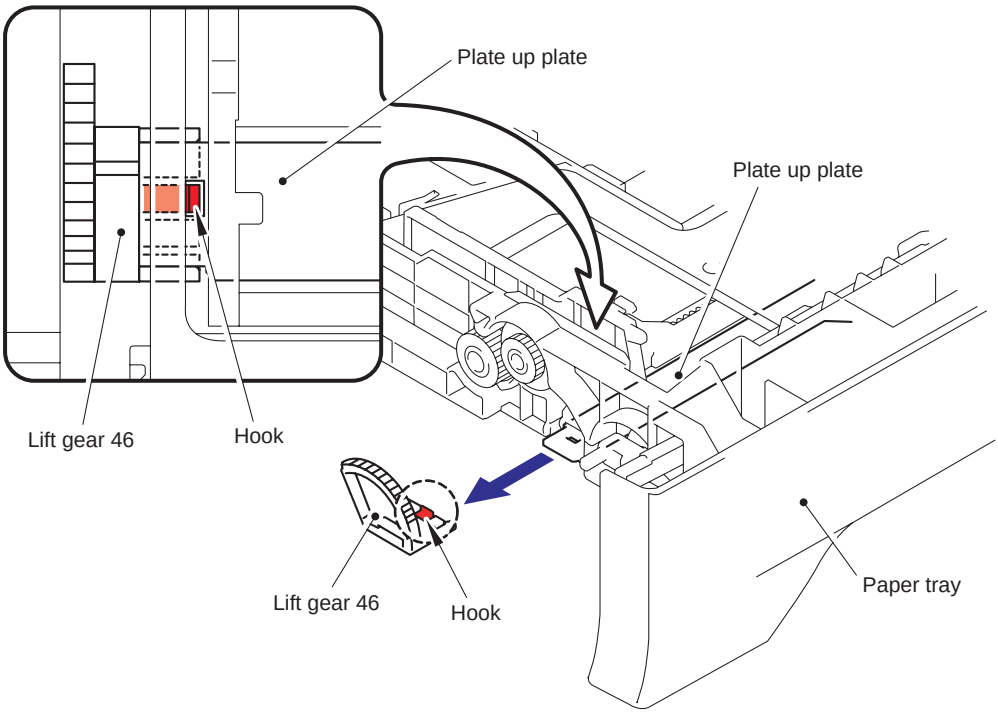

Fig. 5-138

(7) Remove the Gear 21-16.

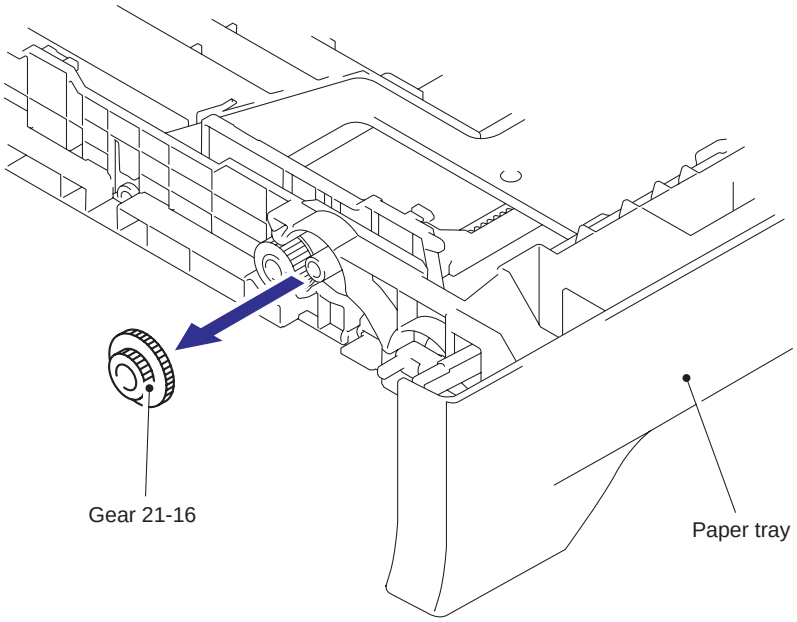

Fig. 5-139

(8) Remove the Gear 15.

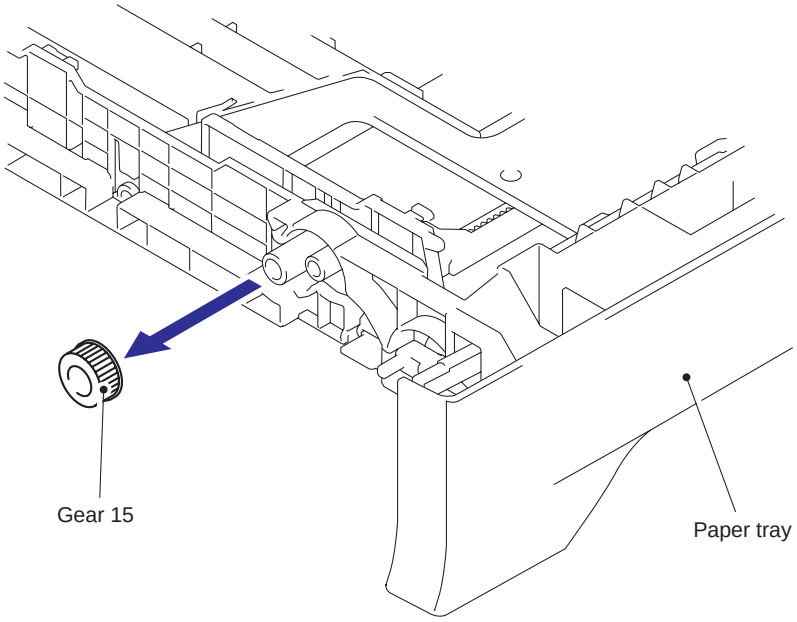

Fig. 5-140

9.2 LT Front Cover ASSY

(1) Remove the two bind B M4x12 Taptite screws.

(2) Remove the LT front cover ASSY.

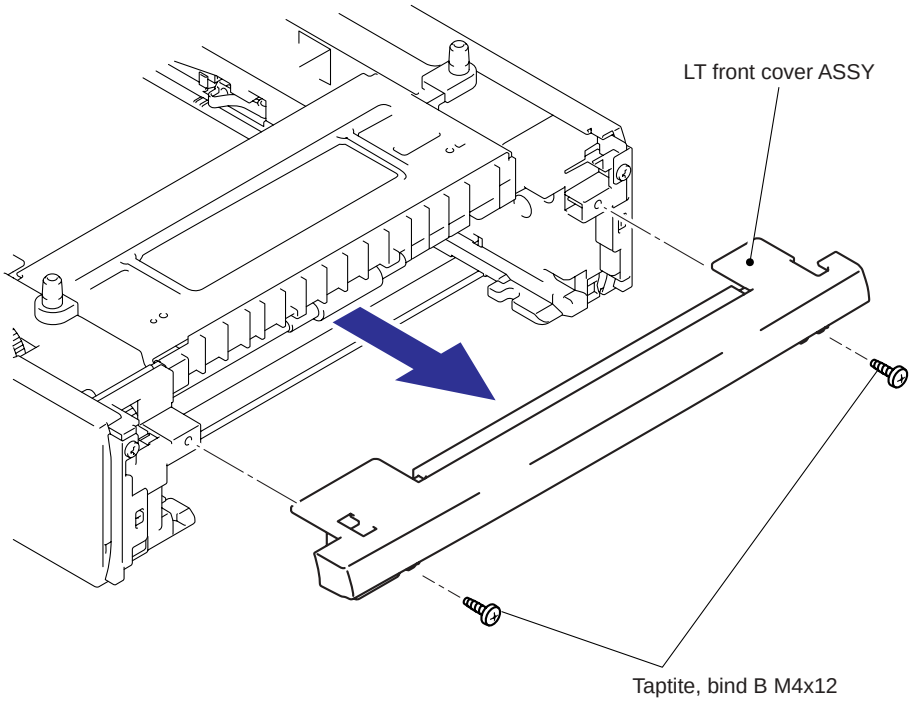

Fig. 5-141

(3) Remove the LT front paper guide from the LT front cover ASSY while pulling the two Hooks inwards.

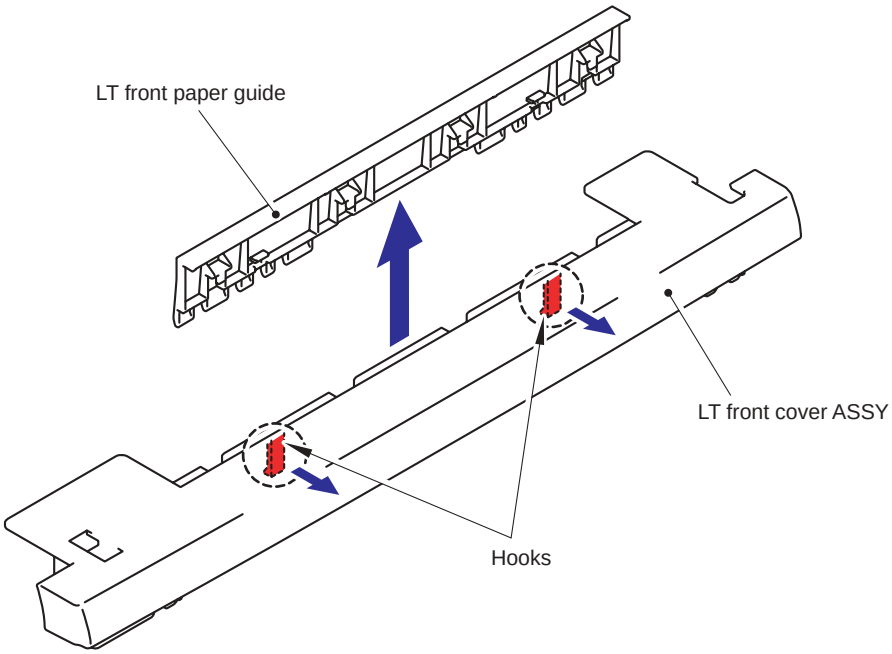

Fig. 5-142

Confidential

9.3 LT Rear Cover

(1) Remove the two cup S M3x6 Taptite SR screws.

(2) Remove the LT rear cover.

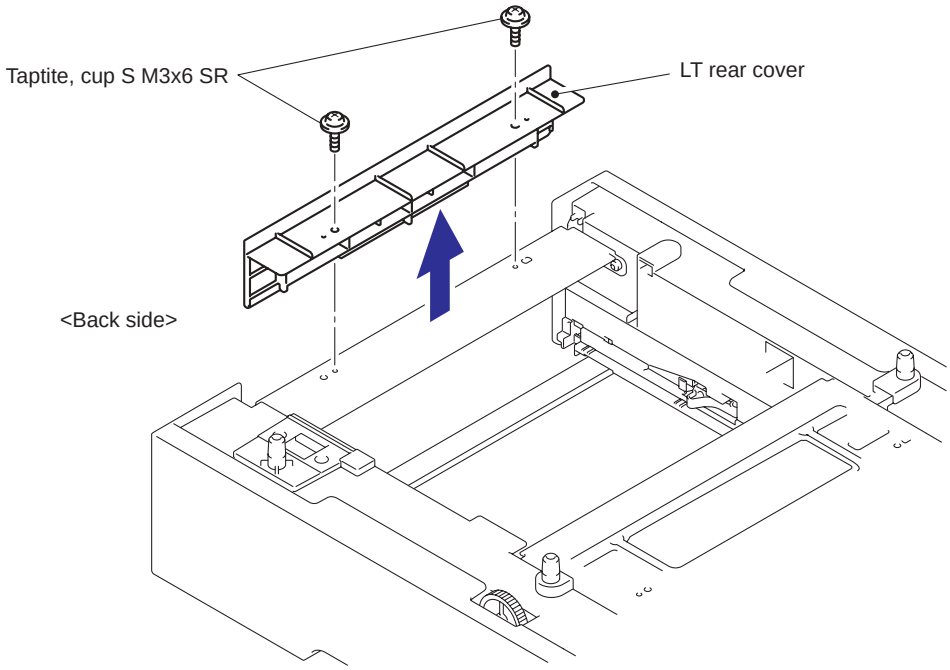

Fig. 5-143

Confidential

9.4 LT Side Cover L

(1) Remove the bind B M4x12 Taptite screw.

(2) Remove the cup S M3x6 Taptite SR screw.

(3) Release the Hooks in the order of the arrows and remove the LT side cover L.

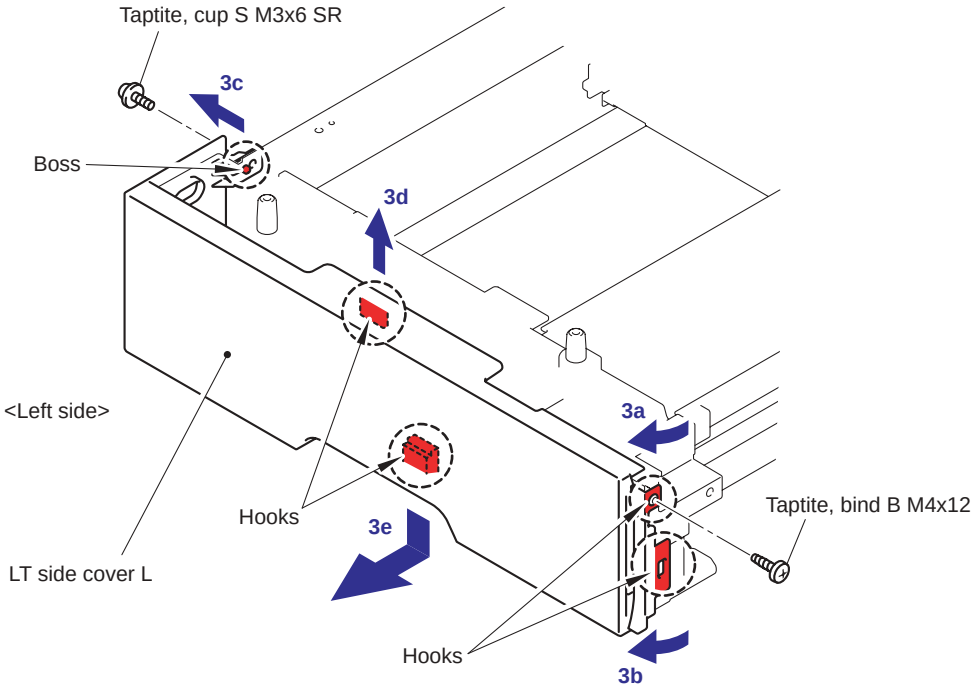

Fig. 5-144

9.5 LT Side Cover R

(1) Remove the bind B M4x12 Taptite screw.

(2) Remove the cup S M3x6 Taptite SR screw.

(3) Release the Hooks in the order of the arrows and remove the LT side cover R.

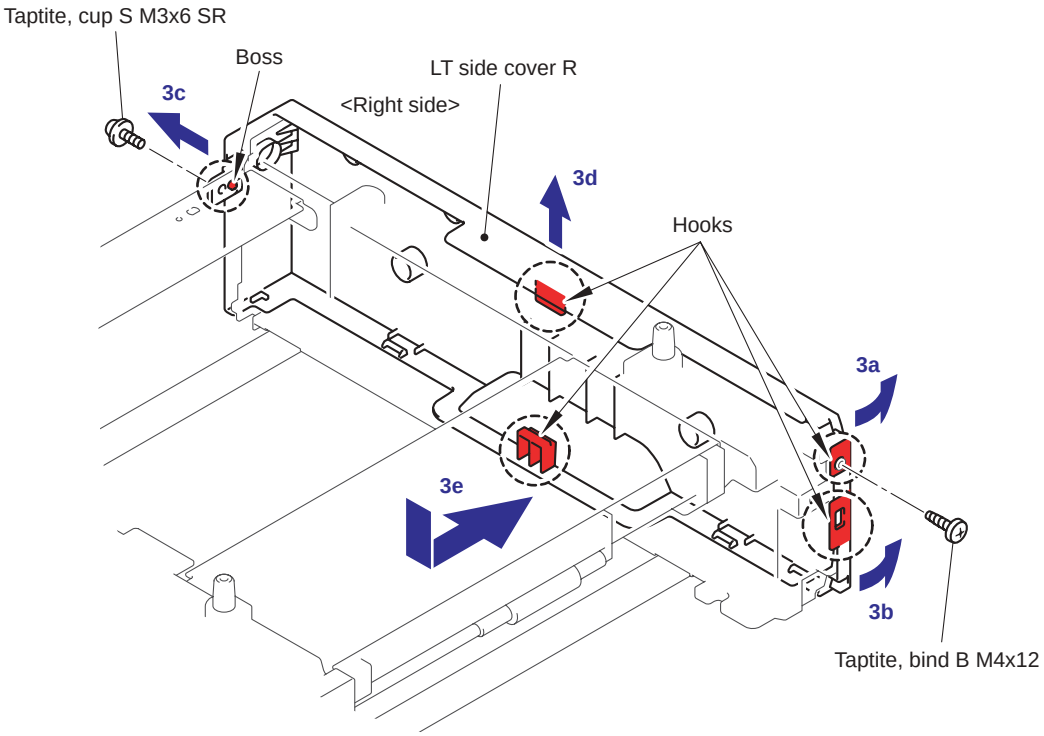

Fig. 5-145

9.6 LT PCB ASSY

(1) Disconnect the connectors from the LT PCB ASSY.

(2) Remove the bind B M4x12 Taptite screw, and then remove the LT PCB ASSY.

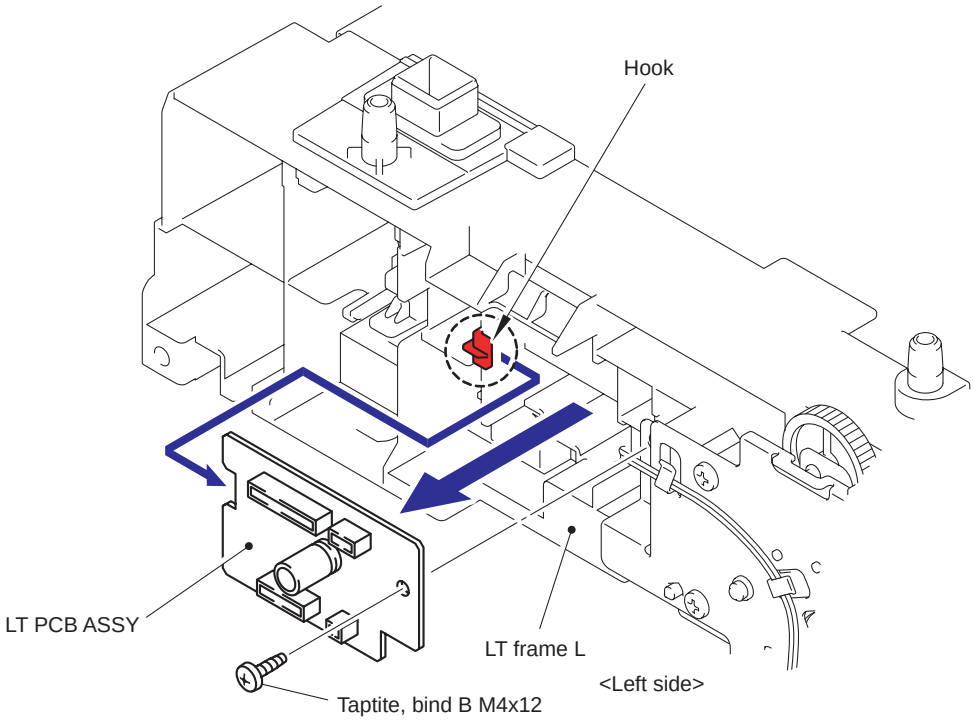

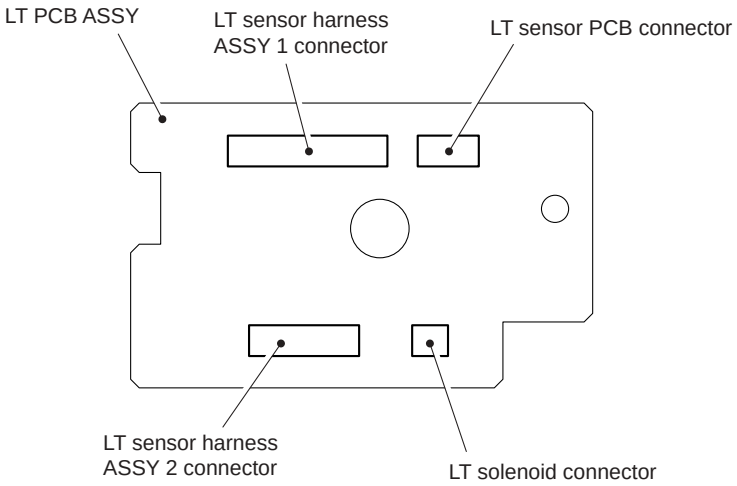

Fig. 5-146

Confidential

9.7 Connector: 55533-1219

(1) Disconnect the Connector: 55533-1219 while pressing the Hooks inwards.

(2) Remove the LT sensor harness ASSY 1 from the Connector: 55533-1219.

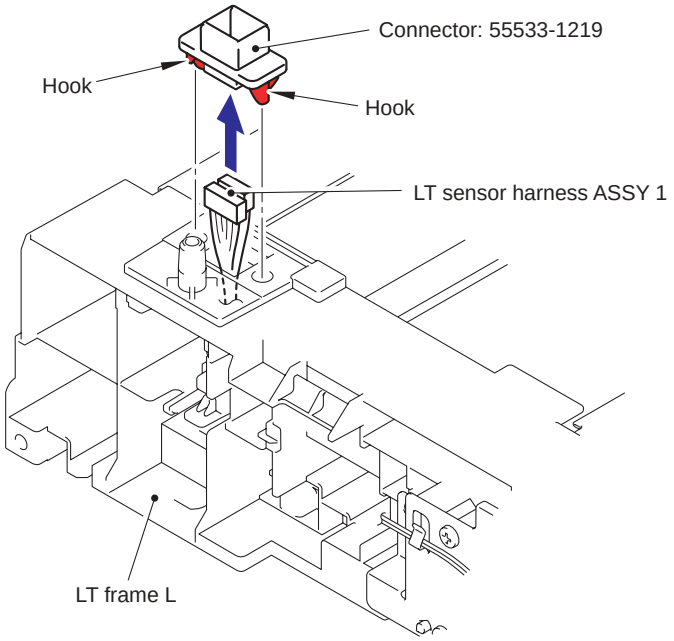

Fig. 5-147

9.8 Connector: 54702-1219

(1) Disconnect the Connector: 54702-1219 while pressing the Hooks inwards.

(2) Remove the LT sensor harness ASSY 2 from the Connector: 54702-1219.

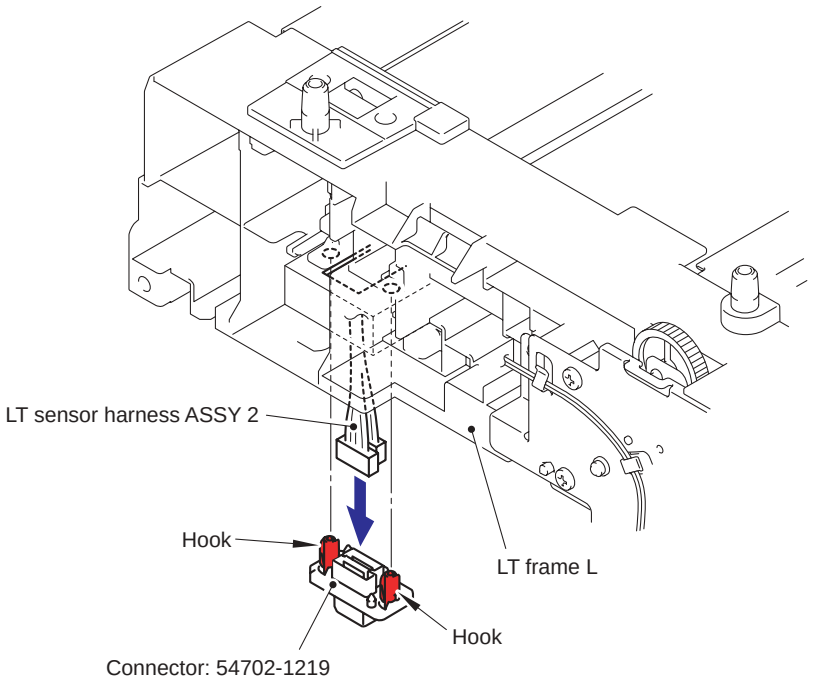

Fig. 5-148

Confidential

9.9 Gear 24 LT

(1) Place the LT so that the LT frame L is at the top.

(2) Release the Hook to remove the Gear 20 T1 roller drive from the LT frame L.

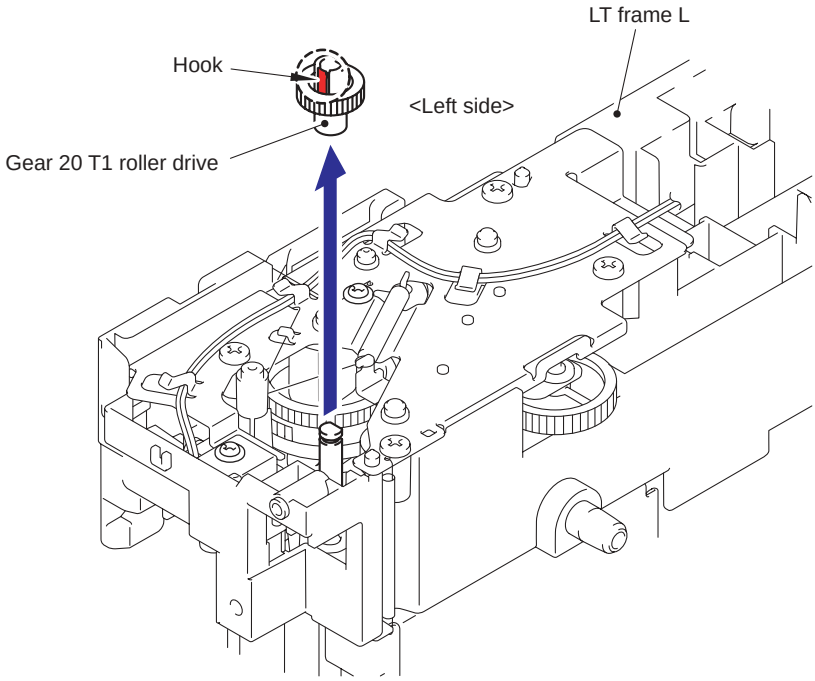

Fig. 5-149

(3) Remove the Retaining ring E4.

(4) Remove the Gear 24 LT from the LT frame L.

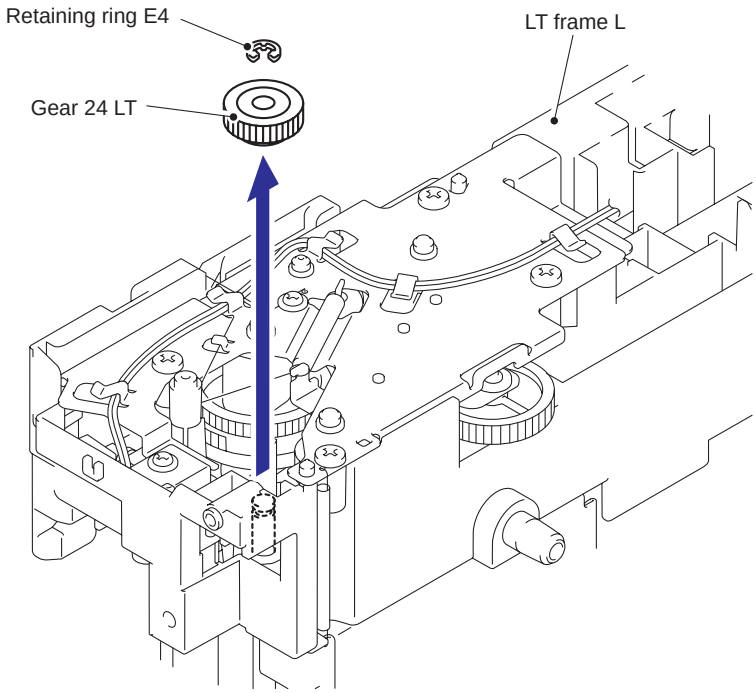

Fig. 5-150

Confidential

9.10 Collar 6

(1) Remove the Gear plate ground spring from the LT frame L.

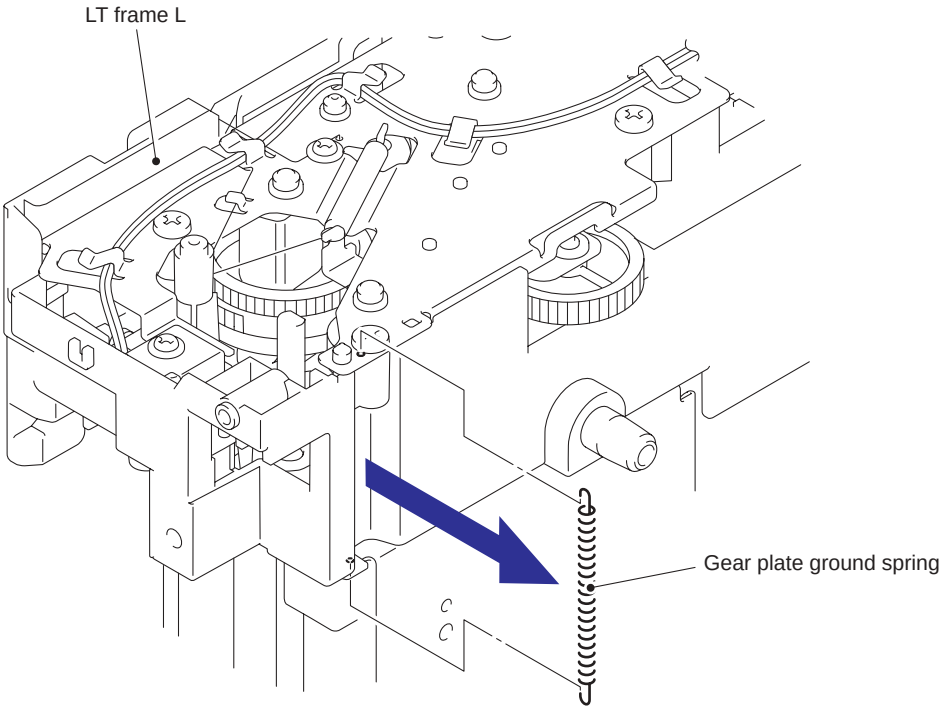

Fig. 5-151

(2) Remove the cup S M3x6 Taptite SR screw, and then remove the Feed roller ground plate.

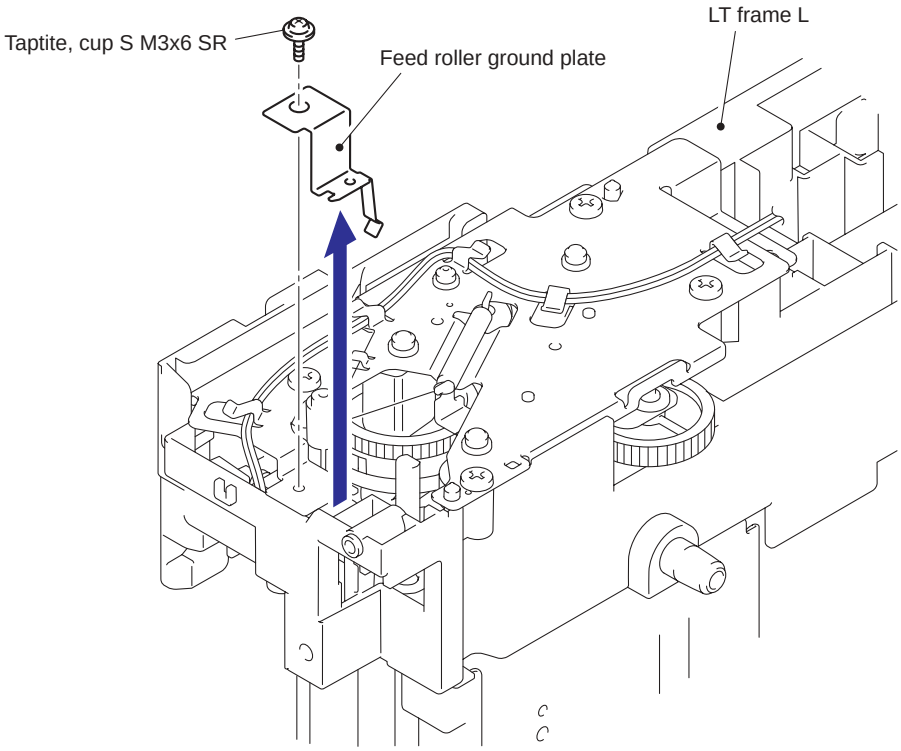

Fig. 5-152

Confidential

(3) Remove the T1 sector gear spring LT from the LT frame L.

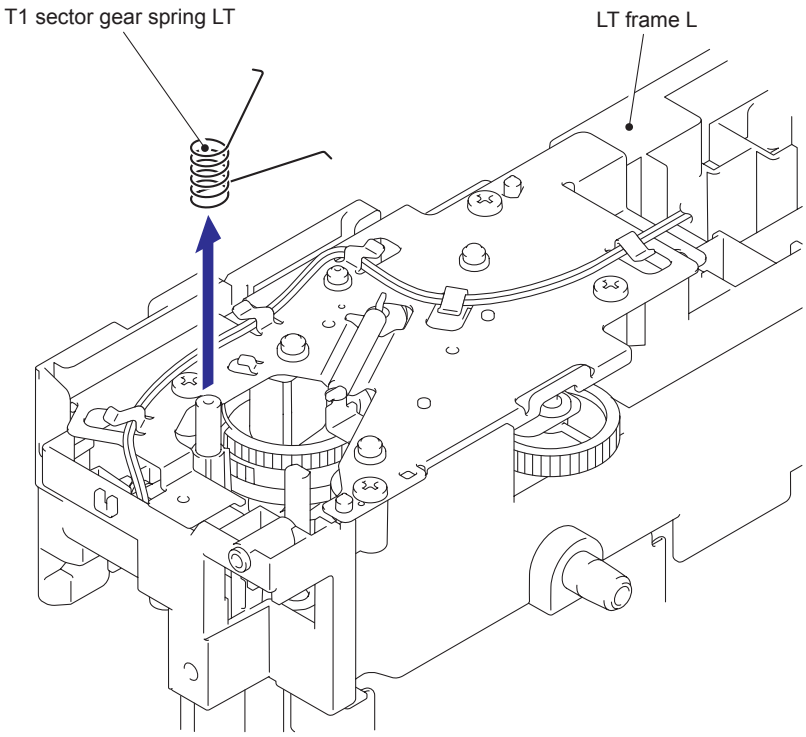

Fig. 5-153

Assembling Note:

- When assembling the T1 sector gear spring LT, ensure that its direction is correct referring to the figure below.

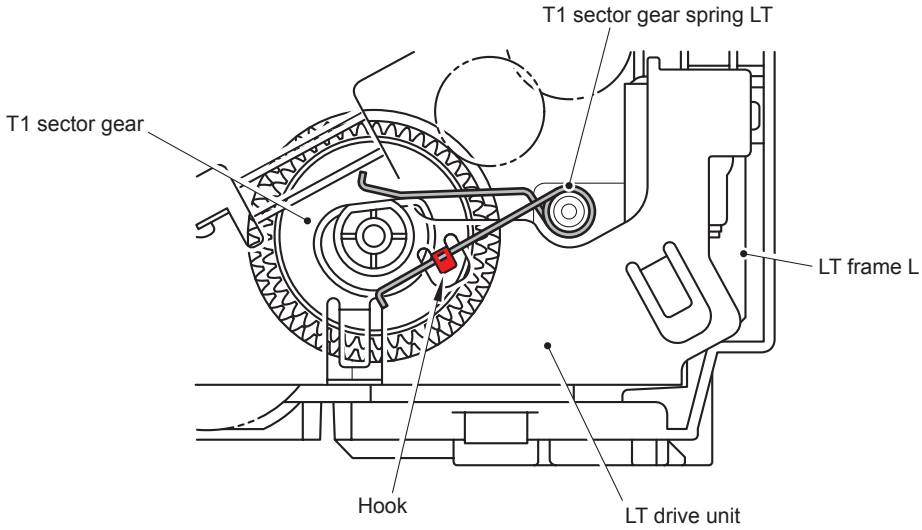

Fig. 5-154

Confidential

(4) Remove the LT solenoid harness from the Hooks of the LT drive unit.

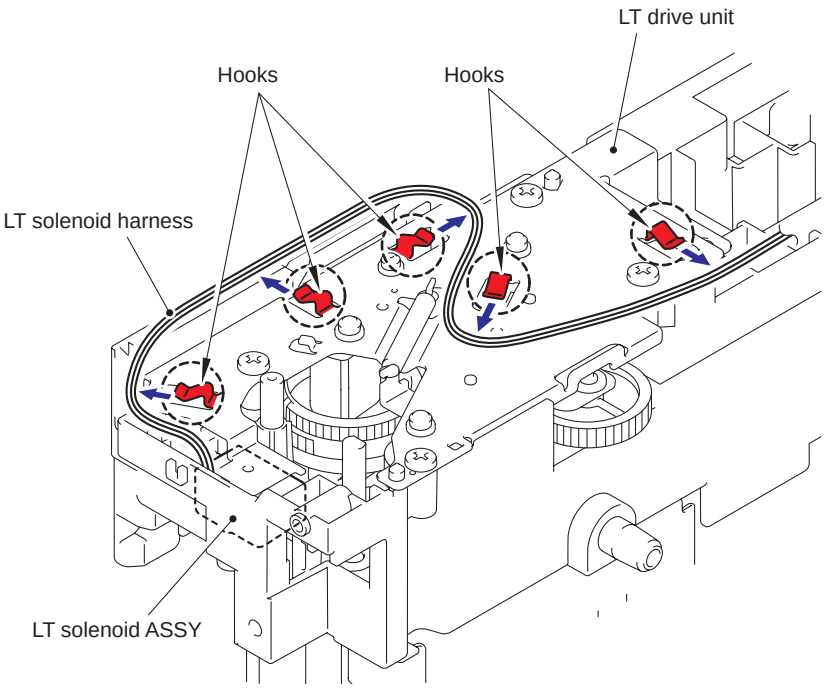

Fig. 5-155

(5) Remove the cup S M3x6 Taptite screw.

(6) Remove the four bind B M4x12 Taptite screws, and then remove the LT drive unit.

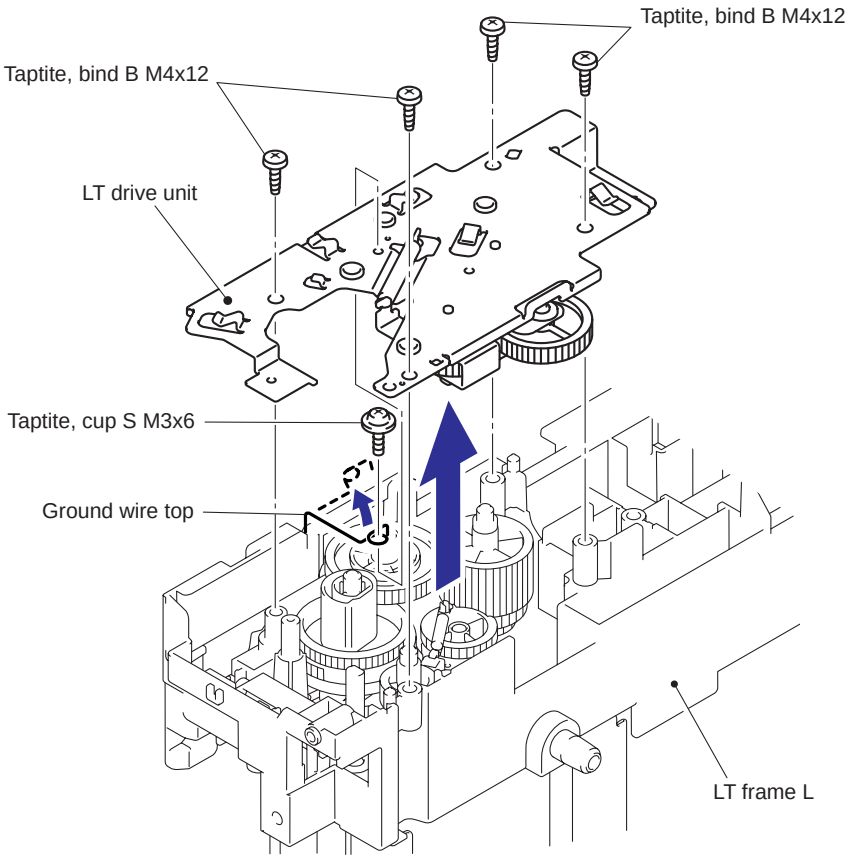

Fig. 5-156

Confidential

(7) Remove the Clutch spring from the LT drive unit.

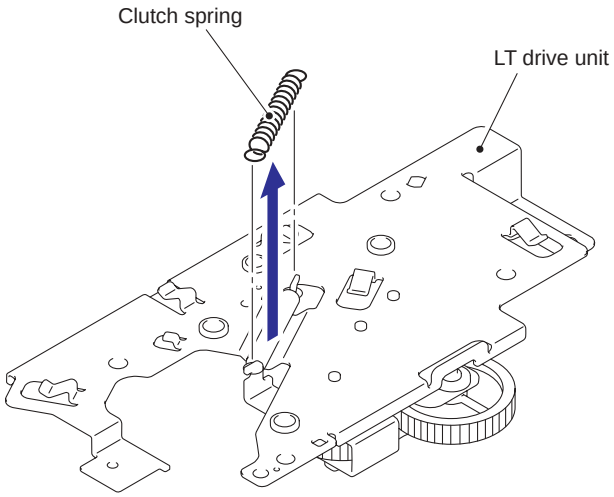

Fig. 5-157

(8) Remove the Collar 6.

(9) Remove the Clutch arm ASSY from the LT drive unit.

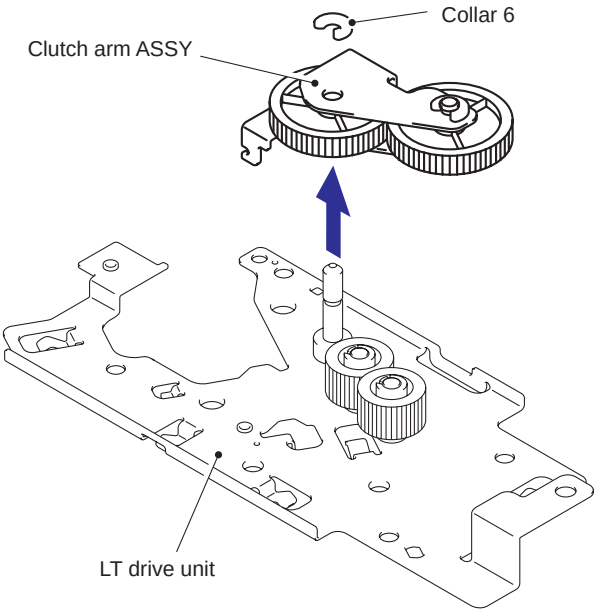

Fig. 5-158

(10) Remove the Collar 6 from the Clutch arm ASSY.

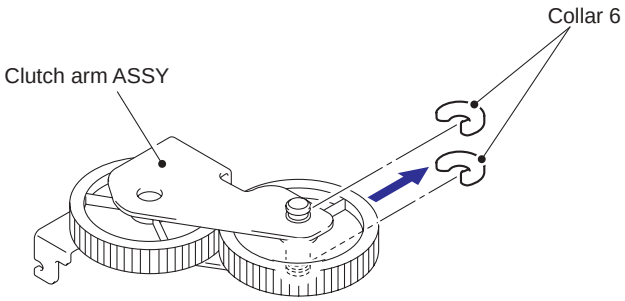

Fig. 5-159

Confidential

9.11 LT Solenoid ASSY

(1) Remove the bind B M3x10 Taptite screw, and then remove the LT solenoid ASSY.

(2) Remove the Solenoid release spring P/R from the LT solenoid ASSY.

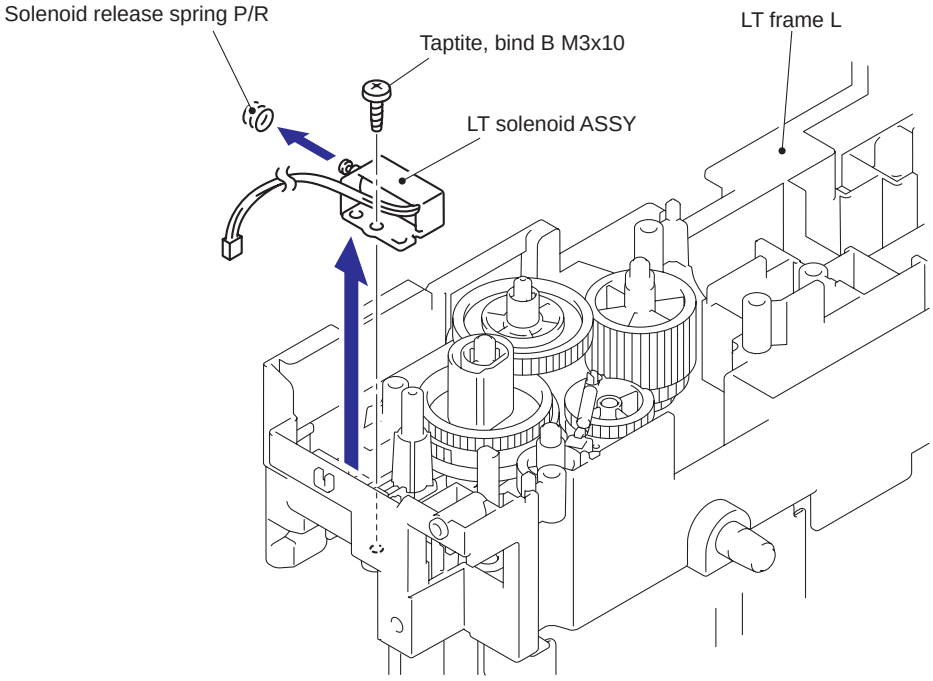

Fig. 5-160

9.12 Roller Holder ASSY

(1) Push the Lift arm to the direction of the arrow 1a and pull out the pin of the Roller holder ASSY. Then, turn the Roller holder ASSY to the direction of the arrow 1b.

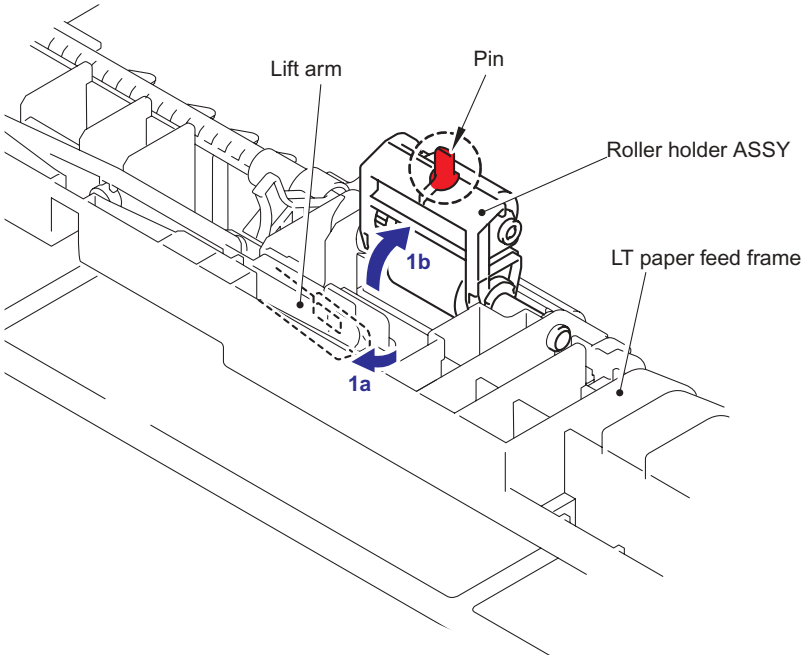

Fig. 5-161

Confidential

(2) Slide the Roller holder ASSY to the direction of the arrow 2a. Then, lift up the gear side of the Roller holder ASSY to the direction of the arrow 2b and pull it out to the direction of the arrow 2c to remove.

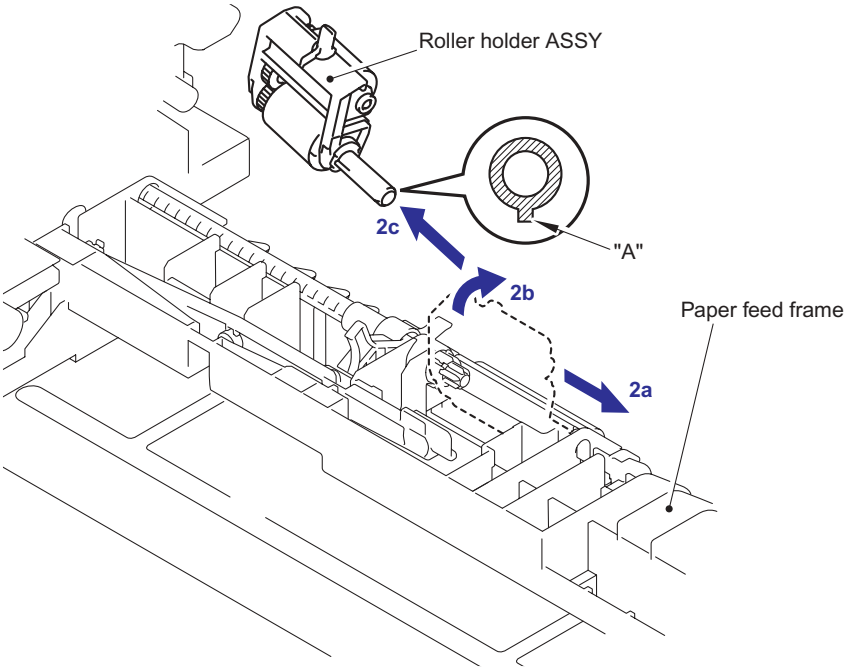

Fig. 5-162

Assembling Note:

- When assembling the roller holder ASSY, align the section "A" on the shaft of the roller holder ASSY with the hole on the paper feed frame.

9.13 Edge Actuator Spring

(1) Remove the Edge actuator spring.

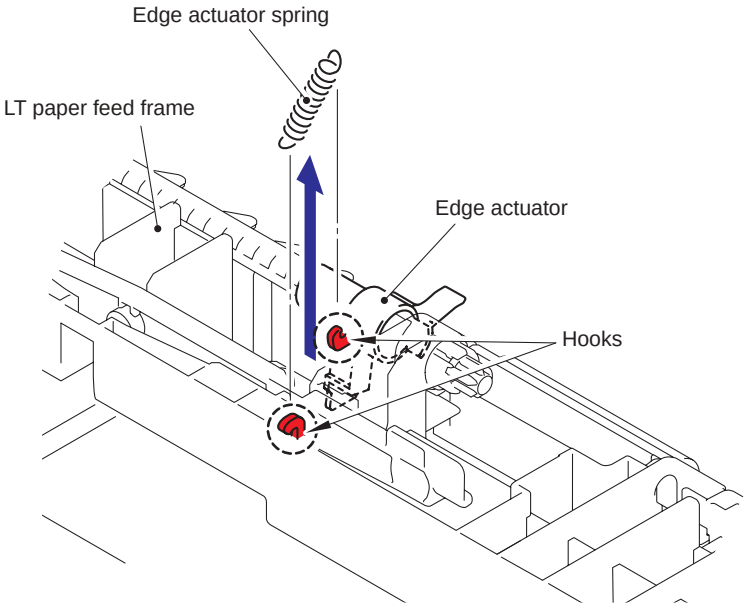

Fig. 5-163

9.14 PE Actuator , Edge Actuator

(1) Release the Hook and remove the Separation R shaft bearing.

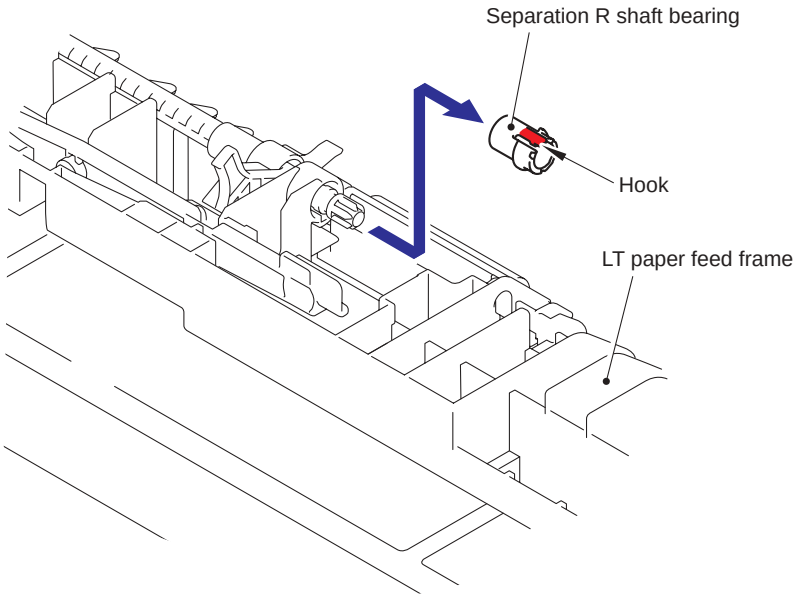

Fig. 5-164

(2) Pull out the Separation roller drive shaft to the direction of the arrow and remove the Edge actuator and PE actuator.

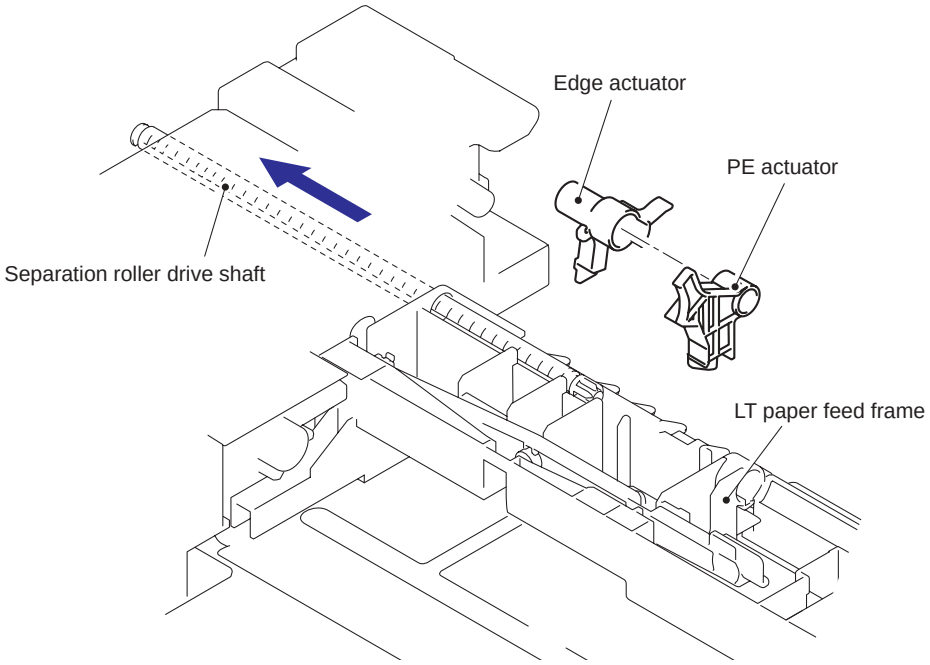

Fig. 5-165

Confidential

9.15 LT Sensor PCB ASSY

(1) Remove the two bind B M4x12 Taptite screws.

(2) Remove the four cup S M3x6 Taptite SR screws, and then remove the LT frame L.

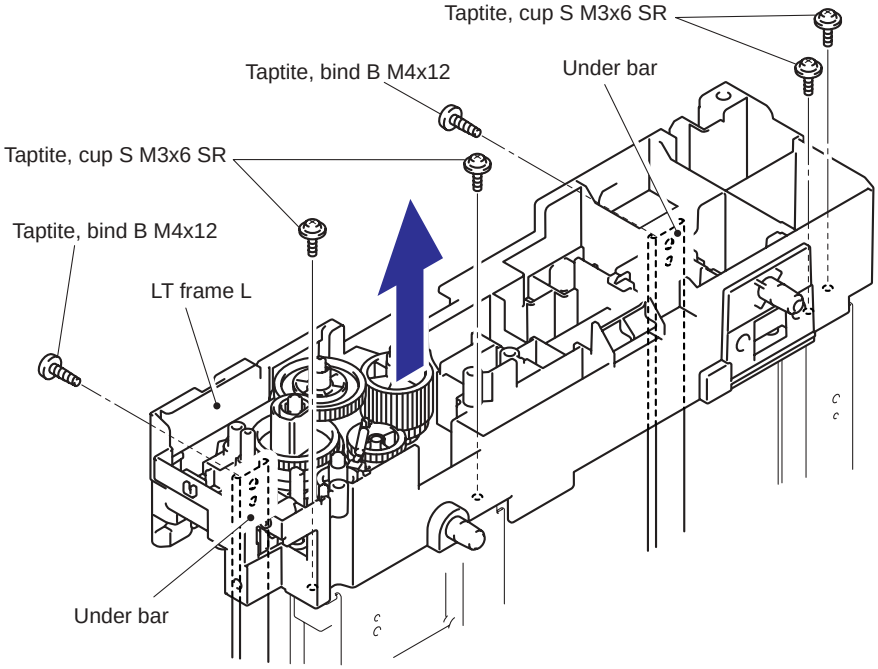

Fig. 5-166

(3) Remove the two cup S M3x6 Taptite SR screws, and then remove the LT paper feed frame.

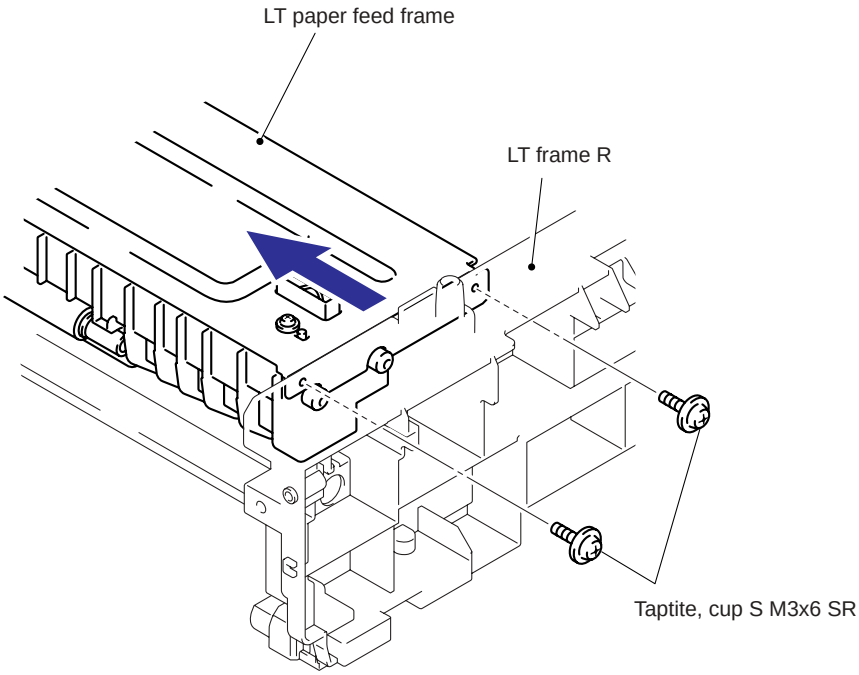

Fig. 5-167

(4) Remove the two cup B M3x12 Taptite screws, and then remove the LT front beam.

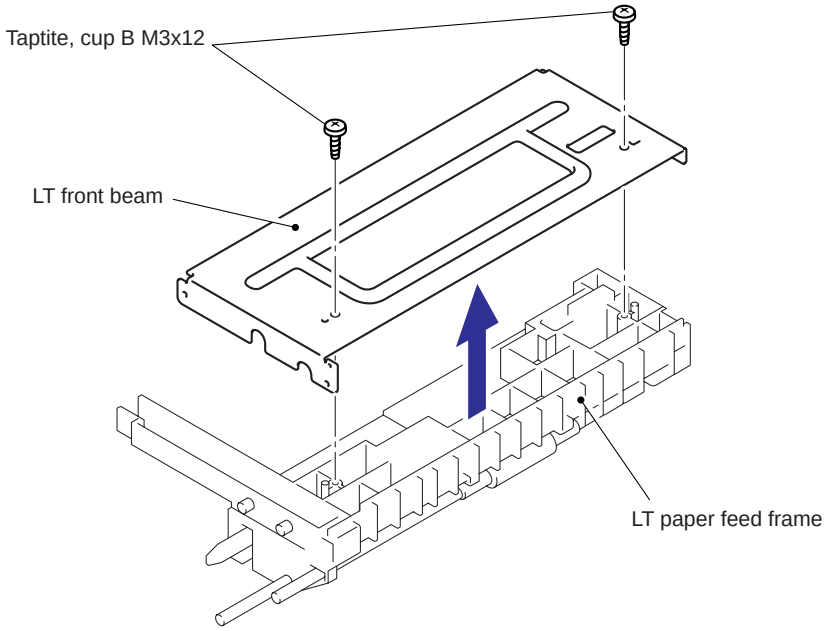

Fig. 5-168

(5) Remove the bind B M3x8 Taptite screw, and then remove the LT sensor PCB ASSY.

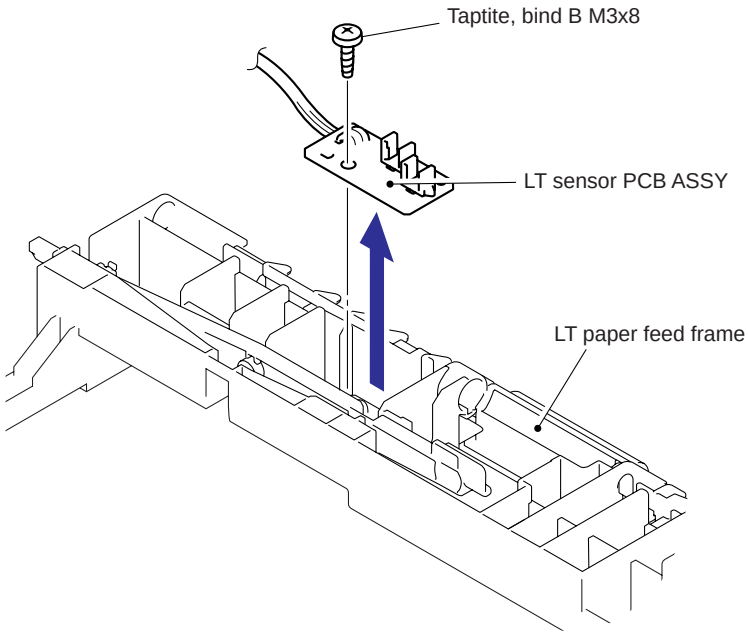

Fig. 5-169

CHAPTER 6

ADJUSTMENTS AND UPDATING OF SETTINGS, REQUIRED AFTER PARTS REPLACEMENT

CHAPTER 6 ADJUSTMENTS AND UPDATING OF SETTINGS, REQUIRED AFTER PARTS REPLACEMENT

This chapter details adjustments and updating of settings, which are required if the main PCB and some other parts have been replaced.

CONTENTS

1. IF YOU REPLACE THE MAIN PCB 6-1

1.1 Rewriting the firmware 6-5

1.2 Setting the default paper size (HL-5340D/HL-5340DL/HL-5350DN/HL-5380DN) . 6-8

1.3 Setting the serial number 6-9

1.4 Setting the toner cartridge type 6-11

1.5 Acquiring the MAC address (Wireless LAN model) 6-11

2. IF YOU REPLACE THE WIRELESS LAN PCB 6-12

3. IF YOU REPLACE THE PERIODICAL MAINTENANCE PARTS 6-13

1. IF YOU REPLACE THE MAIN PCB

■ What to do when replacing the main PCB

- Rewriting the firmware (ROM) of the printer
- Setting the default paper size.
- Setting the serial number.
- Setting the toner cartridge type
- Acquiring the MAC address (WLAN model only)

■ Which part to use for the operation

The table below shows the ROM type of each main PCB.

Model	Main PCB (For a supplied part)	
	ROM 0	ROM 1
HL-5340D/ HL-5340DL	Main firmware	N/A
HL-5350DN/ HL-5350DNLT	Main firmware	Net firmware
HL-5370DW/ HL-5370DWT	Main firmware	Net firmware
HL-5380DN	Main firmware	Net firmware

■ What you should prepare

(1) Computer (Windows® XP/2000 or later)
Create the “hl5300” folder in the C drive.

(2) USB cable (one piece)

(3) FILEDG32.EXE file
Copy the installed program into the "hl5300" folder that has been created in the C drive.

(4) Target firmware: LZXXXX_$.BLF (firmware of the printer)

LZXXXX_$.BLF	LZXXXX: First six digits of the part number of the firmware $: Alphabet representing the revision of the firmware.

Extract it and copy the extracted files into the "hl5300" folder that has been created in the C drive.

(5) Setting file of the default paper size, for example (s5200U.bin):
Extract this file to set the default paper size.

CAUTION :
- The file to be used follow on the table listed on the databank.

(6) Maintenance Driver.zip file
Copy it into the "hl5300" folder that has been created in the C drive. Extract the copied file.

(7) MAINTE.EXE file
Copy it into the "hl5300" folder that has been created in the C drive. Extract the copied file and run the bramainte.exe file by double-clicking.

Refer to the following steps for installing the printer driver.

(8) Installing the maintenance printer driver

To identify terminals connected via USB interface, the PC requires the corresponding virtual USB devices to be implemented by driver. If you connect any number of the machine to your PC, therefore, the same number of virtual USB devices will be automatically configured on your PC. To prevent virtual USB devices from being configured limitlessly, use the unique driver installation procedure described below that enables your PC to identify terminals via single virtual USB device.

Once this installation procedure is carried out for the PC, no more driver installation will be required for that PC to identify machines. If BHL2 Maintenance Driver is already installed to your PC, fully uninstall the BHL2 Maintenance Driver before installing Brother Maintenance USB Printer Driver.

<Procedures>

1) Check that the power switch of the machine is turned off. Disconnect the USB cable that connects the machine with PC.
2) Turn on your PC.
3) Open the front cover, and turn the power supply of the machine on while holding down the [Go] button. Make sure that the **Back cover/Toner/Drum/Paper** LED lights up.
4) Release the [Go] button, and then make sure that all LEDs are off.
5) Press the [Go] button for the 2 seconds, and the **Paper** LED lights up.
6) Click the “maintenance.exe” of the Printer Maintenance Driver which has been copied in the “hl5300” folder to start.
7) The following screen appears, indicating the detection of device installation wizard. Click Next to proceed.

8) Alert warning message of WHQL appears three times. Click Continue Anyway to proceed.

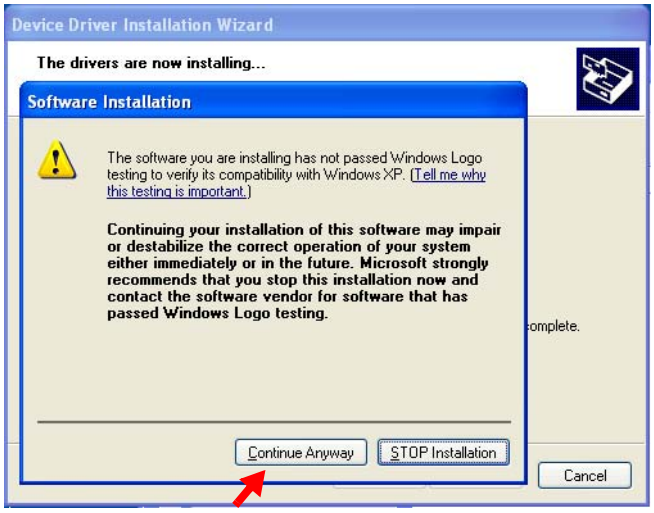

9) If the device driver is successfully installed, the following message screen appears. Click Finish to return.

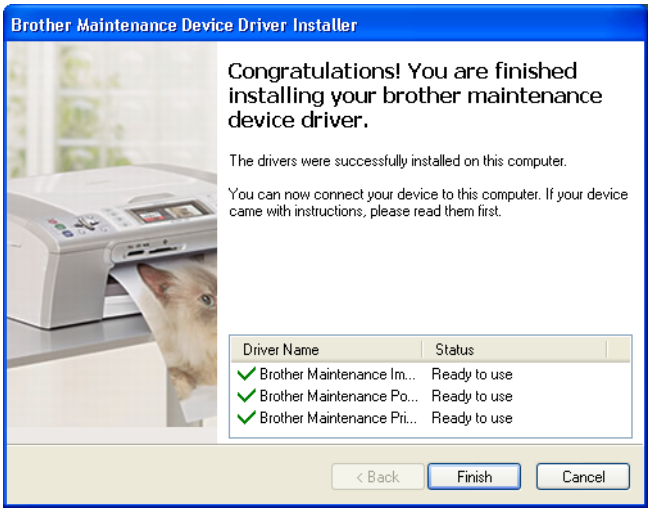

10) Connect the machine to your PC using the USB cable.

11) Select “Install the software automatically (Recommended)” and click Next.

Confidential

12) Alert warning message of WHQL appears. Click Continue Anyway to proceed.

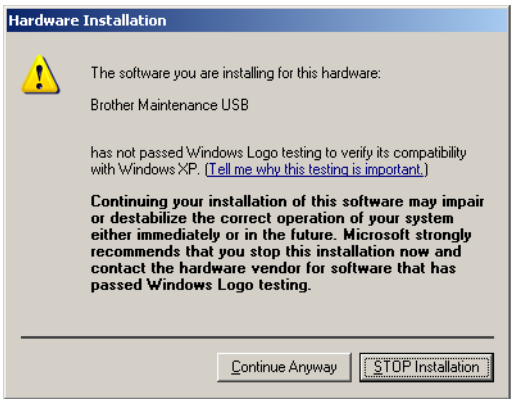

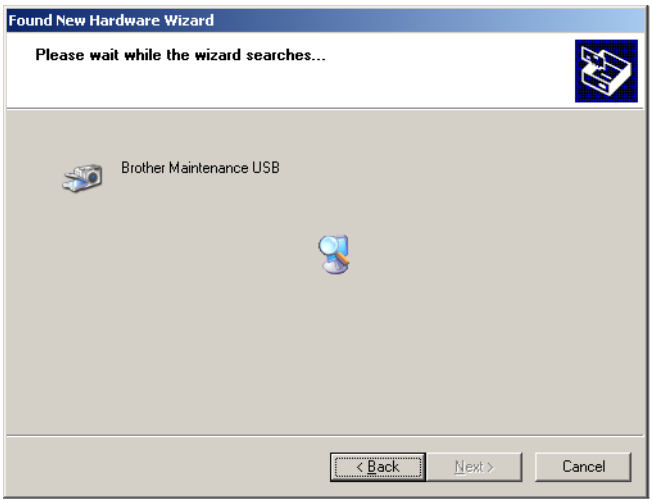

13) If the Brother Maintenance USB Printer driver is successfully installed, the following message screen appears. Click Finish to return.

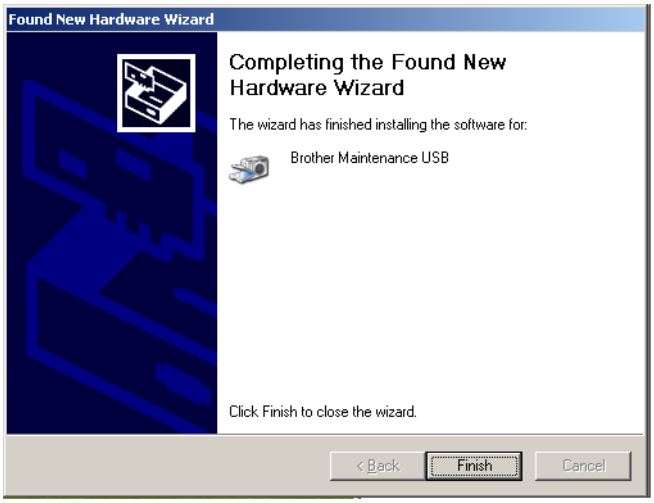

1.1 Rewriting the firmware

After the installation procedure of the Brother Maintenance USB Printer driver is completed, refer to the following steps for the detailed procedures to rewrite the program files. If the Brother Maintenance USB Printer Driver has already been installed to your PC, start to rewrite the program files.

<Procedures>

(LED model)

(1) Connect the PC and printer with the USB cable.

(2) Turn the power supply of the printer on while holding down the [Go] button and the [Job Cancel] button. Make sure that all LEDs are on. The yellow **Status** LED lights up when releasing the [Go] button and the [Job Cancel] button. Press the [Go] button for eight times (Main Firmware) or ten times (Net Firmware). A few seconds later, the printer goes into the ROM rewriting mode. If the error rewriting the firmware occurs, press the [Go] button for five times to rewrite the firmware again.

Note;

- Press the [Go] button within 2 seconds after releasing the [Go] button and the [Job Cancel] button. Return to the ready state automatically if no operation is implemented within 2 seconds.

(3) Start the PC.

(4) Open the “hl5300” folder and double-click the FILEDG32 icon to start. Make sure that there is the “**Brother Maintenance USB Printer**” icon, and that no error occurs.

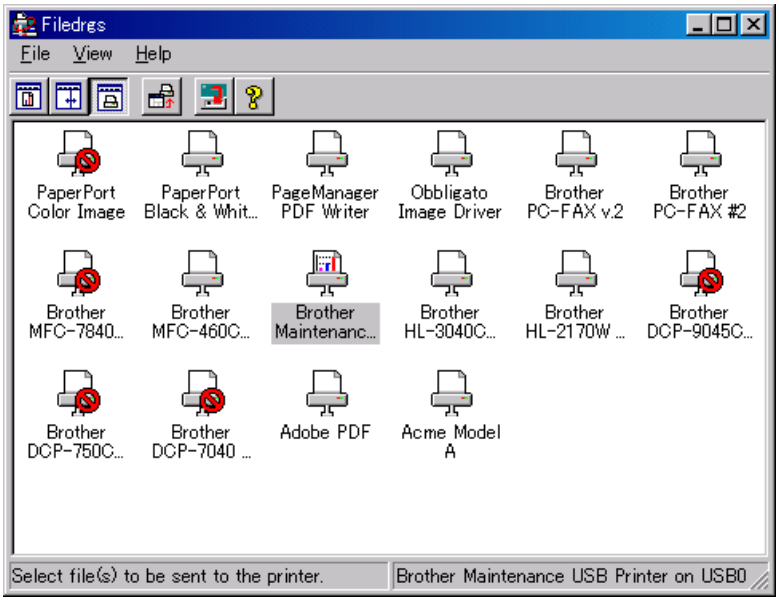

(5) Click the “**Brother Maintenance USB Printer**” icon in FILEDG32 to select.

(6) Drag the firmware (LZ·····.blf) in the same folder and drop it onto the icon of the Brother Maintenance USB Printer in FILEDG32. The files in the firmware are sent to the printer so that they are started to write into the flash ROM automatically. After finishing receiving the files, the printer starts to rewrite the firmware.

(7) The **Status** LED blinks with yellow irregularly when the firmware rewriting is started, then the **Status** LED blinks with red irregularly. Then, be sure not to disconnect the USB cable or to turn off the power supply of the PC before all LEDs are ON to indicate that this firmware rewriting is done.

(8) Turn the power supply of the printer off.

Note;

- If the error related to the BLF file or the printer occurs, the red **Status** LED lights up.

(LCD model)

(1) Connect the PC and printer with the USB cable.

(2) Turn the power supply of the printer on while holding down the [Set] button and the **Back** key.
Select the appropriate mode by pressing the ◀ ▶ keys.
"**PRL->ROM0 W**" (For rewriting the Main Firmware)
"**PRL->ROM1 W**" (For rewriting the Net Firmware)
Press the [Set] button to be set. Make sure that "**Send BLF file..**" message appears on the LCD panel.

Note;

- If the error rewriting the firmware occurs, select the "PRL->ROM 0 (EMU) W" mode and rewrite the firmware again.

(3) Start the PC.

(4) Open the "hl5300" folder and double-click the FILEDG32 icon to start. Make sure that there is the "**Brother Maintenance USB Printer**" icon, and that no error occurs

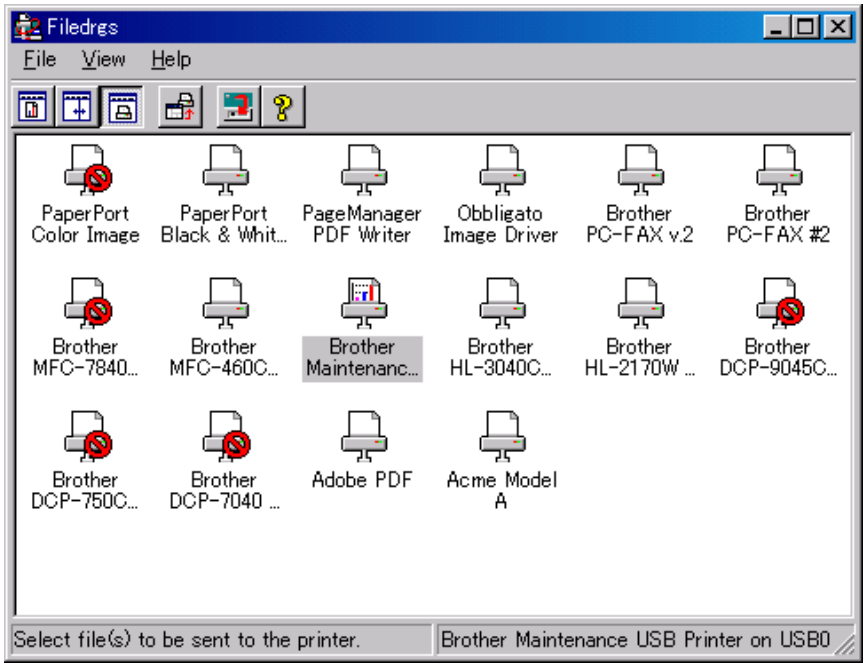

(5) Click the "**Brother Maintenance USB Printer**" icon in FILEDG32 to select.

(6) Drag the firmware (LZ·····.blf) in the same folder and drop it onto the icon of the applicable model in FILEDG32.
The files in the firmware are sent to the printer so that they are started to write into the flash ROM automatically. After finishing receiving the files, the printer starts to rewrite the firmware.
The “Loading XXX” message appears on the LCD panel while receiving the file.

(7) The address messages appear on the LCD panel while the firmware being written. Then, be sure not to disconnect the USB cable or to turn off the power supply of the PC before all LEDs are ON to indicate that this firmware rewriting is done. The “**….Complete….**” message appears on the LCD panel when the firmware rewriting is done properly.

(8) Turn the power supply of the printer off.

Note;

- If the error related to the BLF file or the printer occurs, the red backlight of the LCD panel lights up and the error message appears.

Confidential

1.2 Setting the default paper size (HL-5340D/HL-5340DL/HL-5350DN/HL-5380DN)

HL-5370DW is the dedicated PCB, it is not necessary to set the default paper size.

Operation of printer

(LED model)

(1) Check that the front cover is open.

(2) Turn ON the power switch while the [Go] button is held.

(3) After all LEDs on the panel are lit, only the **Status** LED goes out.

(4) Release the [Go] button and check that all LEDs are out.

(5) Press the [Go] button for a while. Make sure that the **Paper** LED lights up.

(6) Close the front cover of the printer.

(LCD model)

(1) Check that the front cover is open.

(2) Turn ON the power switch while the [Go] button is held.

(3) The message "**USERS MODE**" is shown on the LCD panel.

(4) Release the [Go] button.

(5) Press the [Go] button for a while. Make sure that the **Data** LED lights up.

(6) The message "**PIT3 MODE**" is shown on the LCD panel.
Close the front cover of the printer.

Operation of computer

(7) Open the "hl5300" folder and double-click the FILEDG32 icon to start. Select the applicable printer and click it. (Make sure that there is the icon of the connected printer and that no error occurs.)

(8) Drag "s5200" in the same folder and drop it onto the icon of the applicable model in FILEDG32. When the **Status** LED (LED model) or the **Data** LED (LCD model) of the printer lights up for an instant and goes off immediately after dropping it, the setting is completed. Then, set the serial number following the steps described in the next section.

CAUTION :
- The file to be used follow on the table listed on the databank.
- The specifications for China/India are the dedicated PCB for all models, it is not necessary to set the default paper size.

Refer to the following step to set the serial number.

1.3 Setting the serial number

Operation of printer

(LED model)

(1) Check that the front cover is open.

(2) Turn ON the power switch while the [Go] button is held.

(3) After all LEDs on the panel are lit, only the **Status** LED goes out.

(4) Release the [Go] button and check that all LEDs are out.

(5) Press the [Go] button for a while. Make sure that the **Paper** LED lights up.

(6) Close the front cover of the printer.

(LCD model)

(1) Check that the front cover is open.

(2) Turn ON the power switch while the [Go] button is held.

(3) The message "**USERS MODE**" is shown on the LCD panel.

(4) Release the [Go] button.

(5) Press the [Go] button for a while. Make sure that the **Data** LED lights up.

(6) The message "**PIT3 MODE**" is shown on the LCD panel.
Close the front cover of the printer.

Operation of computer

(7) Connect the computer to the printer with the USB cable.

(8) Double-click the brmainte.EXE file (maintenance utility) which has been copied in the "hl5300" folder to start.

(9) Select "Input Information" from Menu. Select the applicable model name.

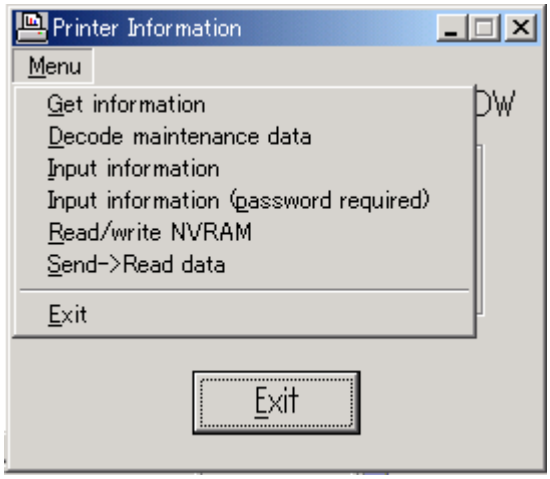

Confidential

(10) Check the port (USB) that the printer is connected through and click “Serial No.” in the lower box.

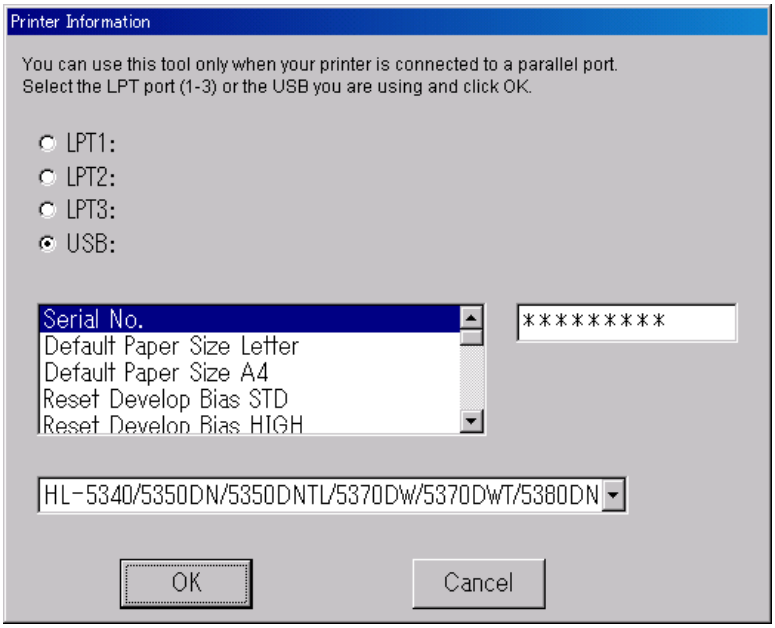

Enter the serial number (the last nine digits) of the printer into the box at the right hand side. The serial number is shown in the window, and check that it is correct. Follow the next step without clicking the **OK** button.

Confidential

1.4 Setting the toner cartridge type

The “Toner Life End” message is displayed according to the upper limit value of the developing roller rotation. The upper limit value is different between the starter toner cartridge, standard one and high-capacity one.
Therefore, it is necessary to set the conformable value to the toner cartridge installed in the machine following the steps below.

<Procedures>

(1) Select “Reset Develop Bias STD” or “Reset Develop Bias HIGH” from Menu according as the currently used toner cartridge.

Note;
- It is impossible to set more than two types of the toner cartridge.
- It selecting more than two types, the NG message is displayed.

(2) Check ON in the check box at the right hand side.
Click the **OK** button in the end. All of the settings are completed.
Turn the power supply of the machine off.

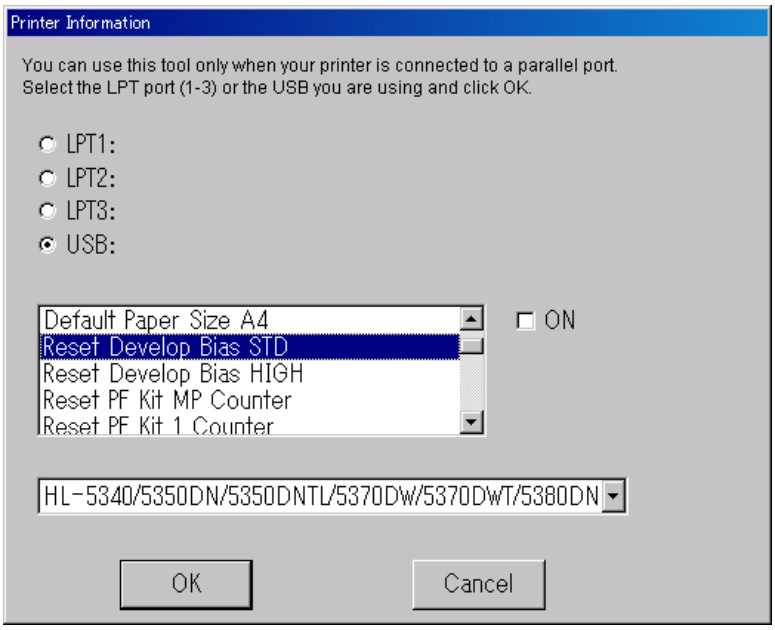

1.5 Acquiring the MAC address (Wireless LAN model)

(1) Shift to the "PIT3 Inspection Mode" of "1.3 Service Mode in Chapter 7".

(2) Close the front cover, and then leave for two minutes.

(3) After having passed more than two minutes, turn the power supply of the machine off.

2. IF YOU REPLACE THE WIRELESS LAN PCB

<What to do when replacing the wireless LAN PCB>

- Backup to the Main PCB of the Wireless LAN PCB Information

<Which parts to use>

WIRELESS LAN PCB ASSY

■ Backup to the Main PCB of the Wireless LAN PCB Information (Wireless LAN model)

The main PCB stores a part of the information of EEPROM on the wireless LAN PCB. It is necessary to write the information of EEPROM on the wireless LAN PCB.

(1) Shift to the "PIT3 Inspection Mode" of "1.3 Service Mode in Chapter 7".

(2) Close the front cover, and then leave for two minutes.

(3) After having passed more than two minutes, turn the power supply of the machine off.

3. IF YOU REPLACE THE PERIODICAL MAINTENANCE PARTS

If any of periodical replacement parts are replaced, it is necessary to change the count of total pages on each periodical maintenance parts to zero, and to modify a number of times for replacing each periodical maintenance parts according to the procedures below.

Note;

- As for HL-5380DN models, it is possible to reset the count of each periodical maintenance parts by operating the LCD panel. Refer to "2.2 Reset Parts Life Menu in Chapter 7".

<What you should prepare>

(1) Computer (Windows® XP/2000 or later)
Create the “hl5300” folder in the C drive, for example.

(2) MAINTE.EXE
Download the above files from the databank and copy it into the “hl5300” folder that has been created in the C drive. Extract the copied file and run the “brmainte.exe” file by double-clicking.

<Procedures>

Operation of printer

(LED model)

(1) Check that the front cover is open.

(2) Turn ON the power switch while the [Go] button is held.

(3) After all LEDs on the panel are lit, only the **Status** LED goes out.

(4) Release the [Go] button and check that all LEDs are out.

(5) Press the [Go] button for a while. Make sure that the **Paper** LED lights up.

(6) Close the front cover of the printer.

(LCD model)

(1) Check that the front cover is open.

(2) Turn ON the power switch while the [Go] button is held.

(3) The message “**USERS MODE**” is shown on the LCD panel.

(4) Release the [Go] button.

(5) Press the [Go] button for a while. Make sure that the **Data** LED lights up.

(6) The message “**PIT3 MODE**” is shown on the LCD panel, and then close the front cover of the printer.

Operation of computer

(7) Connect the computer to the printer with the USB cable.

(8) Double-click the “brmainte.EXE” (maintenance utility) which has been copied in the “hl5300” folder to start.

(9) Select “Input Information” from Menu.

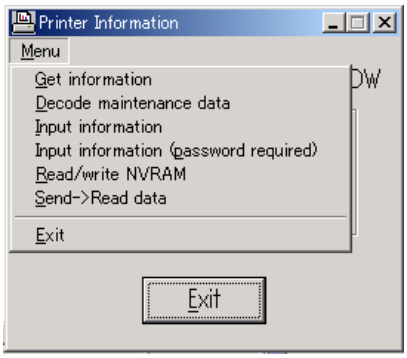

(10) Select the applicable model name. And check the port (USB) that the printer is connected through.

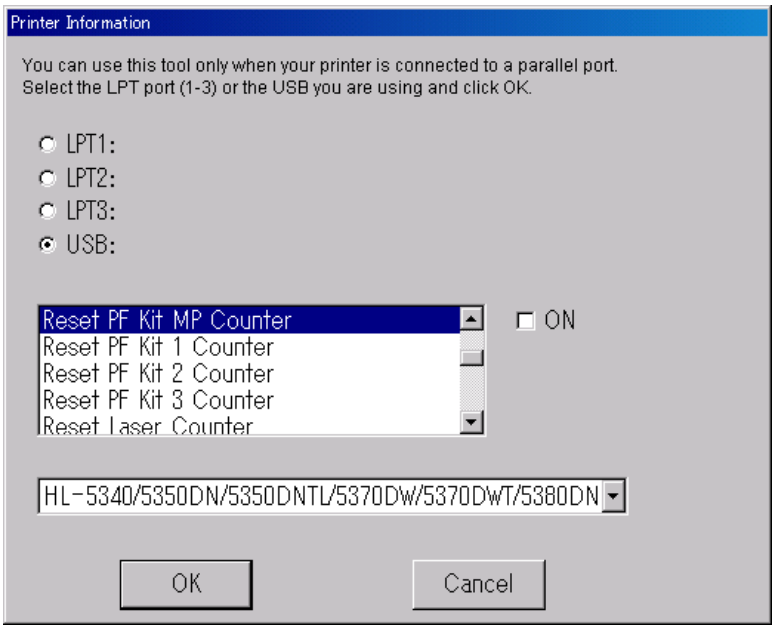

(11) Select the item of each periodical maintenance parts and check “ON” and click **OK**.

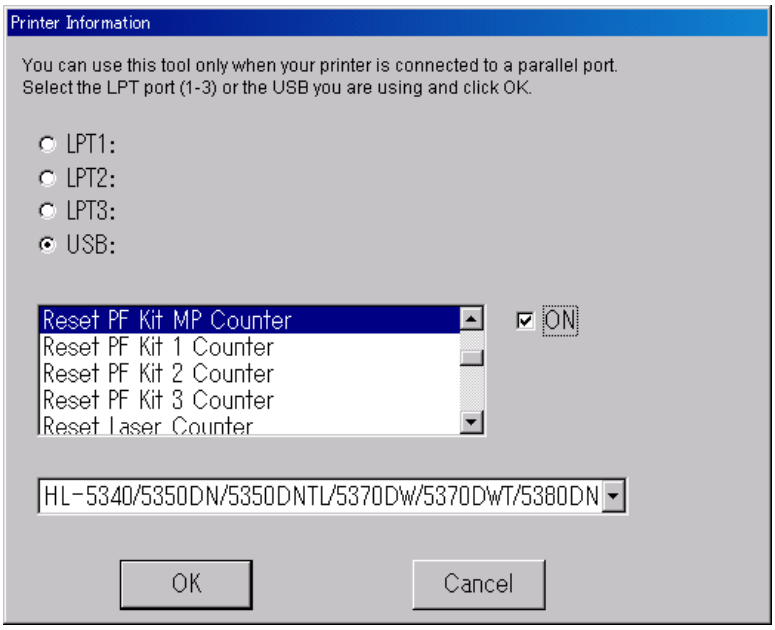

Confidential

CHAPTER 7

SERVICE MODE

CHAPTER 7 SERVICE MODE

The maintenance mode is exclusively designed for the purpose of checks, settings and adjustments using the buttons on the control panel or open/close of the front cover. You can perform operational checks of panel PCB, sensors, perform a print test, display the log information or error codes.

CONTENTS

1. CONTROL PANEL 7-1

1.1 List of service support functions 7-1

1.2 User Mode 7-3

1.3 Service Mode 7-5

2. HIDDEN FUNCTION MENUS 7-16

2.1 Professional Menu 7-17

2.2 Reset Parts Life Menu 7-23

2.3 Service Menu 7-24

3. OTHER SERVICE FUNCTIONS 7-29

3.1 Wireless LAN setting (Wireless LAN model) 7-29

3.2 Drum condensation countermeasure mode 7-29

3.3 Print Settings 7-30

1. CONTROL PANEL

Various modes can be used if the power switch is set to ON while the [Go] button is held. There are two types of modes: User Mode and Service Mode. Three types of lamp display are used to indicate that present setting.

- Back cover/Toner/Drum/Paper LEDs are lighted at the same time to show that transfer to the specified mode or another level are completed.
- Status LED is lighted to show that the [Go] button is held when the mode or function is selected. Status LED is out if the [Go] button is not held.
- All LEDs are lighted for 1 second at the same time to show that initialization or change of set values is completed.

1.1 List of service support functions

Front cover	Press the [Go] button when sifting the mode	Press the [Go] button when selecting the function	Function	Refer to:
Close	0 times	Once	1) Test Sample Page	7-4
		Twice	2) Print Fonts	7-4
		Three times	3) 1push Printing Recovery Mode	7-4
		Four times	4) Hex Dump Mode	7-4
		Five times	1) Test Sample Page	7-4
		Six times	5) Network Reset (APIPA: ON) (Test printing for HL-5340D/5340DL)	7-4
		Seven times	1) Test Sample Page	7-4
		Eight times	6) Factory Reset	7-4
		Nine times	1) Test Sample Page	7-4
		Ten times	7) Settings Reset	7-4
		11 times	1) Test Sample Page	7-4
		12 times	8) PCB ONLY Mode	7-4
		More than 13 times	1) Test Sample Page	7-4
Open	Once	Once	9) Factory Inspection Mode	7-7
		Twice	10) Continuous Grid Pattern Print Mode	7-8
		Three times	11) Fixing Unit Test Print	7-8
		Four times	12) NV-RAM Value Dump Mode	7-8
		Five times	13) RAM Check	7-8
		Six times	14) QA Test print	7-8
		Seven times	15) DX setting (ON/OFF)	7-9
		Eight times	16) Paper Size Setting (A4/ Letter)	7-9
		Nine times	8) PCB ONLY Mode	7-4
		More than ten times	Go back to Normal State	

Front cover	Press the [Go] button when sifting the mode	Press the [Go] button when selecting the function	Function	Refer to:
Open	Twice	Once	**17) Printing for Maintenance**	**7-10**
		Twice	**18) Maintenance + Test pattern with margin frame (DX/LongBind)**	**7-12**
		Three times	**19) Network Config Printing**	**7-12**
		Four times	**20) Sleep Mode Setting (ON/OFF)**	**7-12**
		Five times	Ineffective	
		Six times	**21) Developer Roller Counter Reset 2 (For the Standard toner cartridge)**	**7-13**
		Seven times	**21) Developer Roller Counter Reset 3 (For the High-capacity toner cartridge)**	**7-13**
		Eight times	**22) Fixed USB Speed Mode**	**7-13**
		Nine times	**23) USB Speed Indication (ON/OFF)**	**7-14**
		Ten times	**24) Sleep Mode Indication (OFF/Dimmed)**	**7-15**
		More than 11 times	Go back to Normal State	
	Three times	Once	Factory use	
		Twice	Factory use	
		Three times	Factory use	
		Four times	Factory use	
		Five times	Factory use	
		Six times	Factory use	
		Seven times	Factory use	
		Eight times	Factory use	
		Nine times	**25) Inspection Mode Clearance + Inspection Mode Mask**	**7-15**
		Ten times	Factory use	
		11 times	Factory use	
		12 times	Factory use	
		More than 13 times	Go back to Normal State	
	Four times	0 times	Ineffective	
	Five times	Once	Factory use	
	More than six times		Ineffective	
	More than 2 seconds (long push)		**26) PIT3 Inspection Mode**	**7-15**

1.2 User Mode

Basically, user mode should be accessed by service personnel only. Assist as needed, when the telephone support, end users can operate under service personnel order.

<Procedure>

<LED model>

(1) Check that the front cover is closed.

(2) Turn ON the power switch while holding down the [Go] button.

(3) After all LEDs on the panel are lit, only the **Status** LED goes out while holding down [Go] button.

(4) Release the [Go] button and check that all LEDs are off.

(5) Press the [Go] button depending on the necessary number of times.
(If the [Go] button is pressed, the **Status** LED is lighted. If the [Go] button is released, the LED is out.)

<LCD model>

(1) Check that the front cover is closed.

(2) Turn ON the power switch while holding down the [Go] button.

(3) The message "**USERS MODE**" is shown on the LCD panel with the orange backlight while holding down [Go] button.

(4) Release the [Go] button and check that the **Data** LED is off.

(5) Press the [Go] button depending on the necessary number of times.
(If the [Go] button is pressed, the **Data** LED is lighted. If the [Go] button is released, the LED is out.)

Press the [Go] button	Mode
Once	**1) Test Sample Page**
Twice	**2) Print Fonts**
Three times	**3) 1push Printing Recovery Mode**
Four times	**4) Hex Dump Mode**
Five times	**1) Test Sample Page**
Six times	**5) Network Reset (APIPA: ON)**
Seven times	**1) Test Sample Page**
Eight times	**6) Factory Reset**
Nine times	**1) Test Sample Page**
Ten times	**7) Settings Reset**
11 times	**1) Test Sample Page**
12 times	**8) PCB ONLY Mode**
More than 13 times	**1) Test Sample Page**

CAUTION;

- Each mode starts 2 seconds after pressing the [Go] button.
- If the [Go] button is pressed, the **Status** LED is lighted. If the [Go] button is released, the LED is out.

<Function>

Functions of each “**User Mode**”.

1) Test Sample Page

The machine prints a demo page. The machine returns to the ready status after printing.

2) Print Fonts

The machine prints a list of the internal fonts. The machine returns to the ready status after printing.

3) 1push Printing Recovery Mode

Demo page print is possible by pressing [Go] button after the power supply is turned on. The data for printing is cleared since the mode can be executed only once.
This mode enables to recover demo page printing. However, the design of printing is not demo page printing, but test printing.

4) Hex Dump Mode

This mode is printed as Hex data without emulation processing the print data received from the PC. It is used for defectiveness analysis of the transmitted print data.

5) Network Reset (APIPA: ON)

The network setting is reset to its factory setting. (APIPA is ON)
Test printing for HL-5340D/5340DL

6) Factory Reset

The machine is restored to the factory setting. (Permanent fonts and macros are not cleared.)

7) Settings Reset

All setting contents of the user except the maintenance information are cleared.
(Permanent fonts and macros are cleared.)

8) PCB ONLY Mode

Even when the engine error occurs and PCB exchange is required for recovery, the machine can be started, ignoring the engine error if this mode is used. NVRAM data can be obtained.

1.3 Service Mode

The service mode is exclusively designed for the purpose of checks, settings and adjustments, and this function should be accessed by service personnel only. You can perform a print test and display the log information.

<Procedure>

<LED model>

(1) Check that the front cover is open.

(2) Turn ON the power switch while the [Go] button is held.

(3) After all LEDs on the panel are lit, only the **Status** LED goes out while holding down [Go] button.

(4) Release the [Go] button and check that all LEDs are out.

(5) Press the [Go] button once or twice. (If the [Go] button is pressed, the **Status** LED is lit. If the [Go] button is released, the LED is out.)

(6) Check that **Toner/Drum/Paper** LEDs are lighted.

(7) Press the [Go] button depending on the necessary number of times. Each mode starts after 2 seconds. (If the [Go] button is pressed, the **Status** LED is lit. If the [Go] button is released, the LED is out.)

<LCD model>

(1) Check that the front cover is open.

(2) Turn ON the power switch while the [Go] button is held.

(3) The message "**USERS MODE**" is shown on the LCD panel while holding down [Go] button.

(4) Release the [Go] button and check that the **Data** LED is out. (Backlight is green.)

(5) Press the [Go] button once or twice. (If the [Go] button is pressed, the **Data** LED is lit. If the [Go] button is released, the LED is out.)

(6) Check that the message "**USERS MODE**" is shown on the LCD panel with orange backlight.

(7) Press the [Go] button depending on the necessary number of times. Each mode starts after 2 seconds. (If the [Go] button is pressed, the **Data** LED is lit. If the [Go] button is released, the LED is out.)

Press the [Go] button once.

Press the [Go] button again depending on the necessary number of times after check that **Toner/Drum/Paper** LEDs are lighted.

Press the [Go] button	Mode
Once	**9) Factory Inspection Mode**
Twice	**10) Continuous Grid Pattern Print Mode**
Three times	**11) Fixing Unit Test Print**
Four times	**12) NV-RAM Value Dump Mode**
Five times	**13) RAM Check**
Six times	**14) QA Test print**
Seven times	**15) DX setting (ON/OFF)**
Eight times	**16) Paper Size Setting (A4/Letter)**
Nine times	**8) PCB ONLY Mode**
More than Ten times	Go back to Normal State

Press the [Go] button twice.

Press the [Go] button again depending on the necessary number of times after check that **Toner/Drum/Paper** LEDs are lighted.

Press the [Go] button	Mode
Once	**17) Printing for Maintenance** * Start printing when close the front cover.
Twice	**18) Maintenance + Test pattern with margin frame Printing (DX/LongBind)** * Start printing when close the front cover.
Three times	**19) Network Config Printing** (Test printing for HL-5340D/5340DL) * Start printing when close the front cover.
Four times	**20) Sleep Mode Setting (ON/OFF)** * Check that all LEDs are lighted for one second.
Five times	Ineffective
Six times	**21) Developer Roller Counter Reset 2 (For the standard toner cartridge)** * Check that all LEDs are lighted for one second.
Seven times	**21) Developer Roller Counter Reset 3 (For the high-capacity toner cartridge)** * Check that all LEDs are lighted for one second.
Eight times	**22)Fixed USB Speed Mode**
Nine times	**23) USB Speed Indication (ON/OFF)**
Ten times	**24) Sleep Mode Indication (OFF/Dimmed)**
More than 11 times	Go back to Normal State

Press the [Go] button three times.

Press the [Go] button again depending on the necessary number of times after check that **Toner/Drum/Paper** LEDs are lighted.

Press the [Go] button	Mode
One to eight times, ten to 12 times	Factory use
Nine times	**25) Inspection Mode Clearance + Inspection Mode Mask**

Press the [Go] button more than 2 seconds (long push).

Check that **Paper** LED is lighted.

PIT3 Inspection Mode * Factory use.

CAUTION;

- Each mode starts 2 seconds after pressing the [Go] button.
- If the [Go] button is pressed, the **Status** LED is lighted. If the [Go] button is released, the LED is out.

<Function>

Functions of each “**Service Mode**”.

9) Factory Inspection Mode

This mode checks the operation of each sensor and solenoid to check the point with the malfunction, when repair the machine.

- The machine goes into the inspection mode by a special operation when the power is turned on.
- In the inspection mode, check that the **Status** LED (HL-5340D/5340DL/ 5350DN/ 5350DNLT/5370DW/5370DWT) or the **Data** LED (HL-5380DN) blink when the state of a sensor or a switch is changed (from ON to OFF, or from OFF to ON).

<Sensor Inspection Check Procedure>

- Check sensors.
  Manually activate the sensors and the actuators listed below, and verify that the **Status** LED is lit.
  (When the state is changed continuously, the **Status** LED keeps blinking.)
  (Regist front sensor, Regist rear sensor, Paper eject sensor, New toner sensor, Front cover sensor, PE sensor, Edge sensor, MP PE sensor, DX tray sensor)
  * The toner sensor is unsupported.

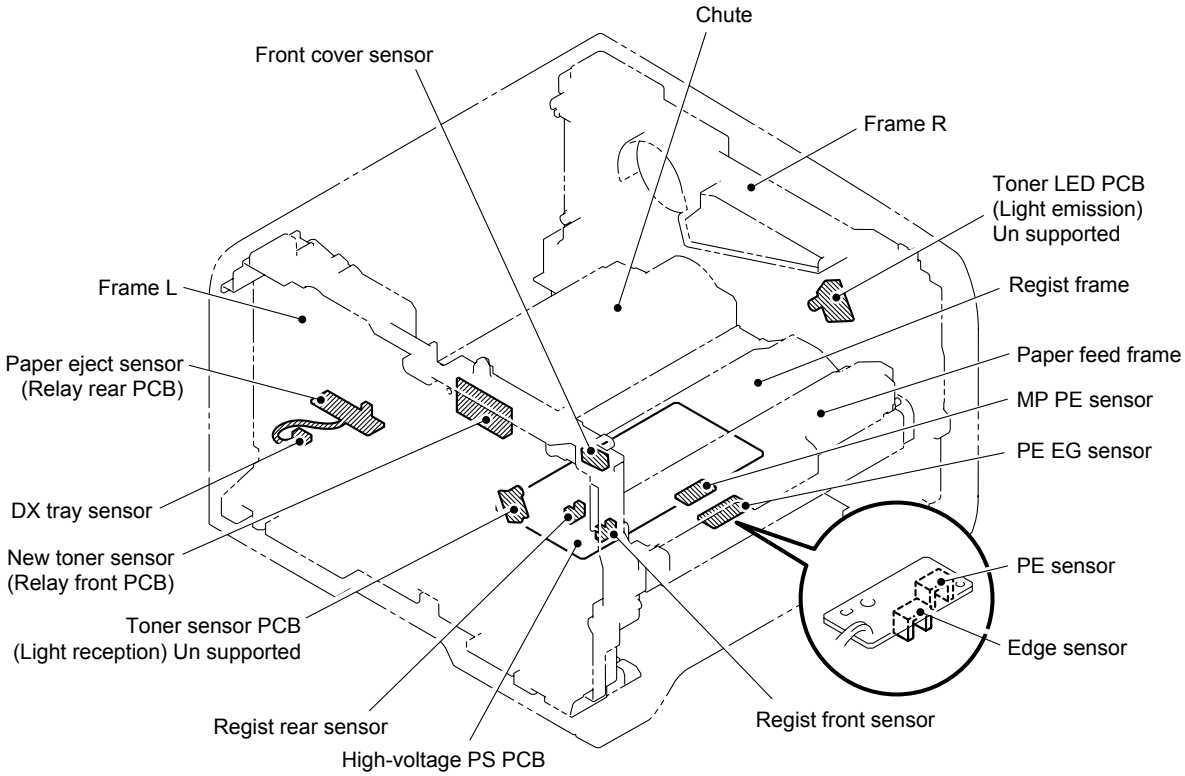

Fig. 7-1

Confidential

- Check the Solenoid.
  Verify that the ejector solenoid is turned on when the regist front sensor is turned on.
  Verify that the regist solenoid is turned on when the regist rear sensor is turned on.
  Verify that the MP solenoid is turned on when the MP PE sensor is turned on.
  Verify that the T1 solenoid is turned on when the Edge sensor is turned on.
- When the verification is completed, turn the power off.

10) Continuous Grid Pattern Print Mode

This mode is to continuously print a grid pattern with a serial number on it. The number of grid pattern prints is displayed at the same time. By turning off and on the power switch, the machine goes back to the ready state.

11) Fixing Unit Test Print

This is to print the following three patterns to check the fixing unit.

- Grid pattern with a serial number on it
- Gray pattern
- Black pattern

When this operation is completed, the machine automatically goes back to the waiting Service mode state.

12) NV-RAM Value Dump Mode

This is to collectively print the whole present state of the NV-RAM of the machine.
When this operation is completed, the machine automatically goes back to the waiting Service mode state.

13) RAM Check

This is to execute a stricter RAM check than a standard one.
<LED model>
If the result turns out unaccepted, it considers an error, and all LEDs blink. If it turns out accepted, the **Status** LED blinks. (Yellow ↔ Green)
<LCD model>
If the result turns out unaccepted, it considers an error, “**ERROR H63**” is displayed. If it turns out accepted the **Data** LED blinks.
The machine does not go back to the ready state unless the power is turned off and on.

14) QA Test print

This is to print four patterns to check the machine quality. When this operation is completed, the machine automatically goes back to the waiting Service mode state.

15) DX setting (ON/OFF)

Select the ON/OFF of duplex setting. Whenever you switch the mode, the setting is changed over from the present one to other. LEDs are as follows when changing the setting.

When changing from DX OFF to ON.

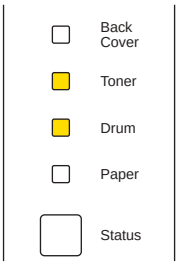

Toner and Drum LEDs light for 1 second.

When changing from DX ON to OFF.

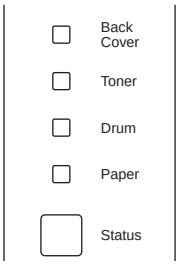

All LEDs does not light.

16) Paper Size Setting (A4/Letter)

You can select the paper size setting (A4/Letter) of the machine body. Whenever you switch this mode, the setting is changed over from the present one to other.
You can verify the setting change by LEDs when releasing the [Go] button.
When the **Toner** and **Drum** LEDs light for 1 second, the paper size is set to Letter.
When launched without LED lighting, the paper size is set to A4.

Confidential

17) Printing for Maintenance

This is to print a list of all maintenance information including printer coverage information. (There is not the development of each national language, and only English.)

```
MAINTENANCE
A) HL-5350DN series   B) SER.NO=197307059
C) CONT. ROM VERSION :1.03
   RAM SIZE : 32Mbyte
   Remaining life of :
D) PF KITMP:   49915        ( 99.8%)
   PF KIT 1:   99867        ( 99.8%)
   PF KIT 2:  100000        (100.0%)
   PF KIT 3:  100000        (100.0%)
   FUSER:   99733        ( 99.7%)
   LASER:   99733        ( 99.7%)
   *DRUM:   24741        ( 98.9%)
   **TONER:( 94.0%)

E) <Device Status>
   Page Count:267
   ***Average Coverage(Total):8.41 %
   ***Average Coverage(Current):8.41 %*
F) <Total Pages Printed>
   MP TRAY:85
   TRAY1:133
   TRAY2:0
   TRAY3:0
   DUPLEX TRAY:49
G) <Total Pages Printed>
   A4/LETTER:226
   LGL/A4LONG/FOLIO:8
   B5/EXECUTIVE:7
   ENVELOPE:7
   A5:4
   OTHERS:15
H) <Total Pages Printed>
   PLAIN/THIN/RECYCLED:267
   TRANSPARENCIES:0
   THICK/THICKER/BOND:0
   ENVELOPES/ENV.THICK/ENV.THIN:0
J) <Total Paper Jams:0 >
   JAM MP TRAY:0
   JAM TRAY1:0
   JAM TRAY2:0
   JAM TRAY3:0
   JAM INSIDE:0
   JAM REAR:0
   JAM DUPLEX:0
K) <Power On Time:4 hours>
   <Power On Count:17 >

L) <Error History (last 10 errors)>
   1:NO TONER          Page:26
   2:STORAGE FULL      Page:8
   3:
   4:
   5:
   6:
   7:
   8:
   9:
   10:
M) <Replace Count>
   PF KITMP:0
   PF KIT 1:0
   PF KIT 2:0
   PF KIT 3:0
   FUSER:0
   LASER:0
   DRUM:0
   TONER:0
N) <Total Pages Printed>
   Previously Used Toner:0
   Current Toner:267
P) <Developing Bias: 400 V>
   [00] [00] [00] (XX) (AH 000) [16777] [00] [24D4]
   [0D0TH/ENG:2200:080919]
   *   Based on A4/Letter printing.
   ** Remaining life will vary depending on the types
      of documents printed.
   *** Calculated coverage
```

Fig. 7-2

Confidential

Display terms is as follows.

A	Series Name	Model name of machine
B	SER. No (Serial Number)	Serial number of machine
C	CONT. ROM VERSION	Rom version of machine
D	Periodic Replacement Parts Information	The remaining life of PF kit MP, PF kit 1, PF kit 2, PF kit 3, Fuser unit, Laser unit, Drum unit and Toner cartridge.
E	Device Status	Page Count, Drum Count, Average Coverage The maximum count for each item is 1 million times.
F	Total Pages Printed (The total printed pages for the each trays)	Total Pages Printed (MP, Tray 1, Tray 2, Tray 3, Duplex). The maximum count for each item is 1 million times. The information above is not cleared when replacing the PF kit.
G	Total Pages Printed (The total printed pages for the each paper size)	The number of A4/Letter, A4Long/Legal/Folio, B5/Executive, Envelope, A5 and other paper types used. The maximum count for each item is 1 million times.
H	Total Pages Printed (The total printed pages for the each media types)	The number of Plain/Thin/Recycled, Transparencies, Thick/Thicker/Band and Envelopes/Env. Thick/Env. Thin types used. The maximum count for each item is 1 million times.
J	Total Paper Jams (The total paper jams for the each position of the jams)	The number of paper jam occurrence in each of the MP, Tray 1, Tray 2, Tray 3, Duplex, Inside and Rear. The paper jam occurs when the machine is turned ON is not counted. The maximum count for each item is 255 times.
K	Power On Time Power On Count	Total energization time of machine Total power on count of machine
L	Error History	The error history including the latest 10 errors and the number of pages when these errors occur are indicated. However, the Cover Open error, No Paper and Manual Feed is excluded. The list is updated up to a million, but it is not updated after a million even if the error occurs. The list is also showed the page counter of the each errors.
M	Replace Count	The number of replacement of DRUM, TONER, PF KIT 1, PF KIT 2, PF KIT 3, FUSER UNIT and LASER UNIT. The maximum count for each item is 65535 times.
N	Total Pages Printed*	Previously Used Toner (The toner cartridge which was used previously), Current Toner (The toner cartridge which is used currently). The maximum value for each count is 65535. % of Toner Life Remaining.
P	Developing Bias*	Developing Bias of now

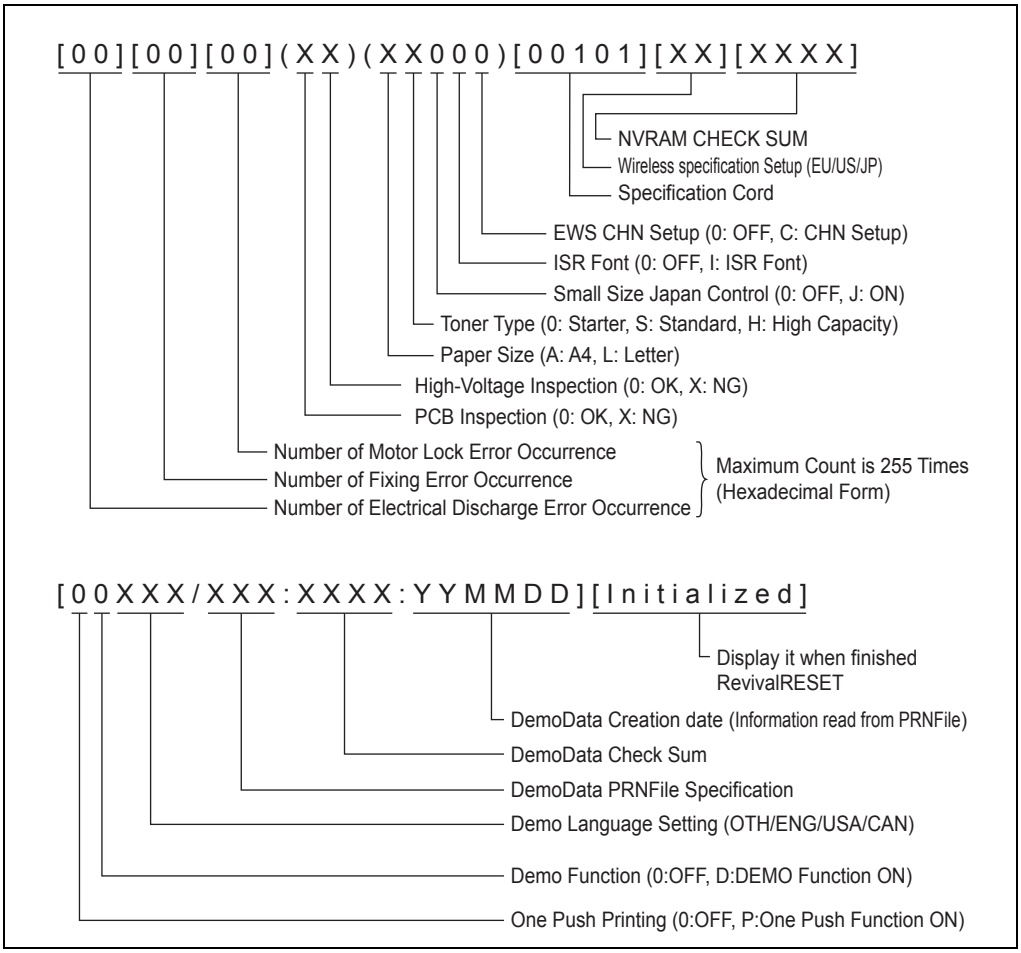

CAUTION;

- * is displayed only in maintenance information.
- Some margin of error must be taken into consideration because coverage for the printable area of A4-size paper is calculated using video signals.

18) Maintenance + Test pattern with margin frame Printing (DX/LongBind)

Print the maintenance printing on the first page, and print the test pattern with margin frame that the country is set by duplex printing on the second pages. Duplex setting is LongBind.

19) Network Config Printing

The function to print the wired or wireless network settings information of the machine.

However wireless model can both Network Config Printing wireless and wired, so that wireless model prints two pages in total of the Network Config Printing.

20) Sleep Mode Setting (ON/OFF)

This is to allow you to turn on and off the sleep mode of the machine by panel operation. The default setting is ON. The machine automatically goes back to the waiting Service mode state after the operation is completed.

21) Developer Roller Counter Reset 1 (Ineffective)

21) Developer Roller Counter Reset 2 (For the standard toner cartridge)

21) Developer Roller Counter Reset 3 (For the high-capacity toner cartridge)

Since print density is likely to become darker as toner is getting older, the developing bias is lowered by degrees according to the number of prints so that an almost fixed density can be maintained from the start of the use of brand-new toner to the end of it.

The value of the developing bias is printed on the maintenance sheet. The developing bias is a parameter which depends on the toner cartridge, so it needs to be reset when the toner cartridge is replaced. At that time, the developing roller counter reading is also reset. This mode is to enable to execute these operations (equivalent to those done when the toner cartridge is replaced) manually from the service mode.

22) Fixed USB Speed Mode

This allows you to switch the setting of Full fixed/Auto switching (HIGH/FULL) of the USB speed. Whenever switching, the current setting is changed to the other one.

The default setting is Auto switching.

It also allows you to check the selected setting by the **Toner** LED (Full fixed) or **Drum** LED (Auto switching) being lit for 1 second when releasing the [Go] button.

	LED Model		LCD Model
When switch the setting from Auto switching to Full fixed.	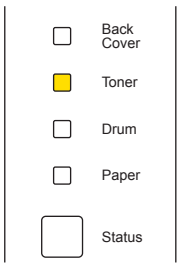	Toner LED lights for 1 second.	Data LED is OFF.
When switch the setting from Full fixed to Auto switching.	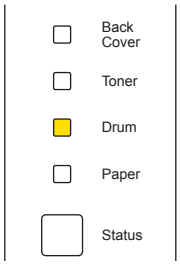	Drum LED lights for 1 second.	Data LED is ON.

23) USB Speed Indication (ON/OFF)

This allows you to switch whether the current USB speed is indicated with the LED or not. Whenever switching, the current setting is changed to the other one.

The USB speed is not indicated by default.

It also allows you to check the selected setting by the **Toner** and **Drum** LEDs being lit for 1 second (USB speed indication is ON) or all LEDs being lit for 1 second (USB speed indication is OFF) when releasing the [Go] button. The LCD model does not have this function.

USB Speed Indication	LED Model
Switch the setting from OFF to ON.	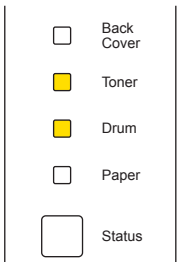 Toner and Drum LEDs light for 1 second.
Switch the setting from ON to OFF.	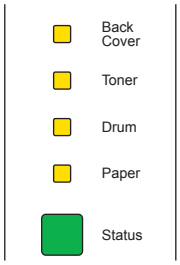 All LEDs light for 1 second.

LEDs indication when USB speed indication is ON.

USB Speed Indication	LED Model
HIGH SPEED	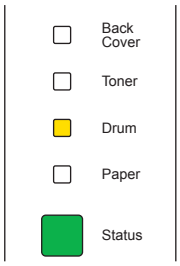
FULL SPEED	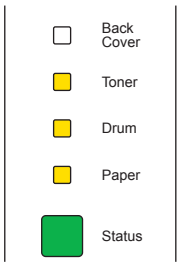

* Warning/Operator Call/Service Call indication are given priority over the USB speed indication.

24) Sleep Mode Indication (OFF/Dimmed)

This is to select whether the **Status** LED is turned off completely or lit in green with low light intensity during the Sleep mode.

Whenever you switch this mode, the setting is changed over from the present one to the other. When you take your finger off from this button, the **Status** LED is lit in 100% light intensity or low light intensity according to the setting so that you can verify the present setting. (The LCD model does not have this function.)

Sleep Mode Status LED indication	LED Model
Switch the setting from Off to low light intensity.	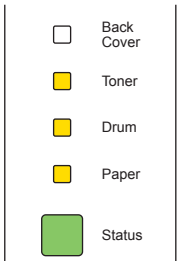 Lights in green with low light intensity for 1 second.
Switch the setting from low light intensity to OFF.	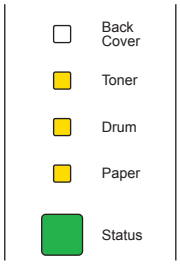 Lights in green with 100% light intensity for 1 second.

25) Inspection Mode Clearance + Inspection Mode Mask

Clear the inspection mode with this function, when the PCB in the inspection mode is found.

26) PIT3 Inspection Mode

Use this mode to back up the main PCB and the wireless LAN PCB, when replacing the main PCB or wireless LAN PCB.

<Transfer Procedure>

(LED model)

(1) Check that the front cover is open.

(2) Turn ON the power switch while the [Go] button is held.

(3) Check that the **Back cover**/**Toner**/**Drum**/**Paper** LEDs are out, and release the [Go] button.

(4) Press the [Go] button for 2 seconds after all LEDs are off. If the red **Paper** LED lights, the transfer to the PIT3 inspection mode is finished.

(LCD model)

(1) Check that the front cover is open.

(2) Turn ON the power switch while the [Go] button is held.

(3) Check that the LCD indication of “USERS MODE”, and release the [Go] button.

(4) Press the [Go] button for 2 seconds. If the LCD indication switches “PIT3 MODE”, the transfer to the PIT3 inspection mode is finished.

2. HIDDEN FUNCTION MENUS

The three hidden function menus are provided for the HL-5380DN printer with the LCD.

(1) Professional Menu: by pressing the [Go] and [Set] buttons at the same time.
Refer to "2.1 Professional Menu" in this chapter

(2) Reset Parts Life Menu: by pressing the [Go] and [+] buttons at the same time.
Refer to "2.2 Reset Parts Life Menu" in this chapter

(3) Service Menu: by pressing the [+] and [Set] buttons in this order while holding down the [Go] button.
Refer to "2.3 Service Menu" in this chapter

The method to enter the special mode by the button operation is as follows:

<Pressing the 1 button when the printer is turned ON>

Panel	Function
Go	To Users Mode
Secure Print	Continuous test printing
+	Version Check
-	Hex Dump Mode
Set	Initializing the NVRAM

<Pressing the 2 button when the printer is turned ON>

Panel	Function
Set & Back	Rewriting the Flash ROM
Go & +	Checking the hardware (DRAM check, etc.)
- & +	Factory Line Inspection Mode
- & Set	High-voltage power supply Check Mode
Go & Set	Clearing the E50 (FUSERMULF)

<Pressing the 2 button in the normal status>

Panel	Function
Go & +	RESET PARTS LIFE (Clearing the counters of the periodical replacement parts)
Go & Set	Professional Menu
- & Set	Indicating the error descriptions (The details of the service call are indicated in English.)

<Others in the normal status>

Panel	Function
Go & (+, Set)	Service Menu (Acquiring the service information such as the number of replacement or paper jam occurrence, error, etc.)

2.1 Professional Menu

The main purpose of the professional menu is to customize the printer function which is opened to the users as per request.

How to enter the Professional Menu

Turn the machine on.

Press the [Go] button and [Set] button together to enter the Professional Menu.

How to access the Required Menu

Use either [+] or [-] button to scroll through the menu listing. To select an item, press the [Set] button. Then the sub-menu will appear.

Scroll through the sub menu items using the [+/-] buttons. To go back to a higher level, select the "**exit** …" menu in the same level using the [+/-] buttons.

How to input a Value or set for a Professional Menu Mode

Enter the required mode as explained above. The setting appearing on the display is the current setting.

Select the required setting using the [+/-] buttons, then press the [Set] button. The previous value remains if the [Set] button is not pressed.

How to exit the Professional Menu Mode

There are three options to exit the Professional Menu mode; either to press [Go] button at any sub menus, to press the [-] button consecutively to go up roots till exiting the Professional Menu mode, or to go down the menu using [+/-] buttons till the menu "**exit MENU**" appears, and then press the [Set] button to exit the mode.

Confidential

<Function Table>

Title & Subtitle		Item to be Set	Description
TRAY SETTING			
	MANUAL FEED	PAPER IN=CONT*	Feeds paper automatically when printing using the manual feed function.
		PAPER IN=STOP	Feeds paper by pressing the [Go] button when printing using the manual feed function.
RESET SETTINGS		RESET SETTING1	Selects the "User setting 1" as the current printer setting.
SAVE SETTINGS		SAVE SETTING1	Saves the current printer setting as the "User setting 1".
SAVE FONT			
	PRIMARY FONT	SET ID=####	Saves the current primary fonts in LaserJet Emulation into the storage devices (ROM Disk). After fixing the first three digits with the **Set** button, set the last two digits.
	SECONDARY FONT	SET ID=####	Saves the current secondary fonts in LaserJet emulation into the storage devices (ROM Disk). After fixing the first three digits with the **Set** button, set the last two digits.
	DOWNLOAD FONT	DOWNLOAD=####	Saves the downloaded fonts in LaserJet emulation into the storage devices (ROM Disk). After fixing the first three digits with the **Set** button, set the last two digits.
SAVE MACRO (When a macro is registered if the LaserJet emulation is selected.)		SET ID=####	Saves the macro in LaserJet emulation into the storage devices (ROM Disk). After fixing the first three digits with the **Set** button, set the last two digits.
TRAYCOMMAND MODE		TRAY COM.=NORM.*	HP LaserJet 4 compatible.
		TRAY COM.=SPEC.	HP LaserJet 3 compatible.
READOUT SELECT		READOUT=ON	When receiving DC3 in FX emulation, ignores the data received before DC1.
		READOUT=OFF*	Not ignore the data even DC3 is received.

Title & Subtitle	Item to be Set	Description
FONT SELECT		
SCALABLE FONT (Only when the LaserJet emulation is selected.)	FONT=ALL*	Enables all scalable fonts when selecting PCL font setting.
	FONT=LJ4	Disables the fonts below when selecting PCL font setting. Atlanta, Bermuda Script, PC Brussels, Copenhagen, Germany, Portugal, Calgary, San Diego, US Roman
FONT SELECT	PRIMARY FONT	Selects primary fonts in LaserJet emulation.
	SECONDARY FONT	Selects secondary fonts in LaserJet emulation.
IBM CHR SET MODE	IBM E1H=Esszet*	Places "Esszet" on E1h of IBM character set.
	IBM E1H=Beta	Places "Beta" on E1h of IBM character set.
W BOLD ON/OFF	W BOLD=OFF*	Does not convert into bold even if the same character is entered into the same position in the FX or XL emulation.
	W BOLD=ON	Converts into bold if the same character is entered into the same position in the FX or XL emulation. (The print speed is lowered.)
DLFNT Bd/It	DLFNT Bd/It=NO*	Creates the bold and italic letters from the download font.
	DLFNT Bd/It=YES	Does not create the bold and italic letters from the download font.
B PROD ON/OFF	B PROD=ON*	Creates the bold and italic letters from the bitmap font.
	B PROD=OFF	Does not create the bold and italic letters from the bitmap font.
CONDENCE SELECT	CONDENC=16.66p*	Sets the pitch of the condense letter in the EPSON/IBM emulation to 16.66 pitches.
	CONDENC=17.14p	Sets the pitch of the condense letter in the EPSON/IBM emulation to 17.14 pitches.
OEM FONT SELECT	OEMFONT=DISABLE*	Disables the European Parliament fonts.
	OEMFONT=ENABLE	Enables the European Parliament fonts.
DARKFONT SELECT	DARKFONT=DISABLE*	Disables the bold brougham font.
	DARKFONT=ENABLE	Enables the fold brougham font.

Title & Subtitle		Item to be Set	Description
FONT SELECT			
	BRO FONT SELECT	BROBITM=DISABLE*	Disables the internal brougham bitmap fonts of 10 and 12 pitches.
		BROBITM=ENABLE	Enables the internal brougham bitmap fonts of 10 and 12 pitches.
	ISR FONT SELECT	ISRFONT=DISABLE	Normal mode
		ISRFONT=ENABLE	Israel Mode
	300DPI PRIORITY	3B PRIO=LOW*	The priority of selection for 300dpi bitmap fonts is standard (=low). Command <ESC><CR>!1T
		3B PRIO=HIGH	The priority of selection for 300dpi bitmap fonts is high. Command <ESC><CR>!2T
	FX/XL SCALE FONT (Setting related to the default font and font selected on the panel in the EPSON/ IBM emulation.)	SCAL.F=NORMAL*	Only similar size fonts are selectable as scalable is selected.
		SCAL.F=ALL SIZE	All size fonts are selectable as scalable font is selected.
	FX/XL SCALE ITA. (Setting related to italic of scalable font when the EPSON/ IBM emulation.)	ITA=OBLIQUE*	Makes upright font oblique to have italic as scalable font is selected.
		ITA=ITALIC SEL	Uses the upright font to have italic as scalable font is selected.
PAPER&TRAY SIZE		DEF PAPER=A4	Printers to be shipped to the other area than USA and Canada have the A4 size setting by default.
		DEF PAPER=LT	Printers to be shipped to USA and Canada have the Letter size setting by default.
PARALLEL MENU		ISRFONT=DISABLE	
	STB/ACK DELAY	CDCC BSSL=L*	ACK signal is sent out before BUSY signal goes down.
		CDCC BSSL=H	ACK signal is sent out when BUSY signal goes down.
REPRINT ON/OFF		REPRINT=ON*	The ON/OFF setting of the reprint function follows the setting of the user menu.
		REPRINT=OFF	Turns the reprint function OFF forcedly.
PS BINARY SELECT		PS BINARY=ASCII*	Default setting. A problem may occur when printing the binary data though Ctrl-T, Ctrl-C and the like are enabled.
		PS BINARY=BIN	Allows you to print the binary data though Ctrl-T and the like are disabled.

Title & Subtitle	Item to be Set	Description
PS CELL MODE	PS CEIL=FLOOR*	
	PS CEIL=CEIL	
HP ESC E COMMAND	HP ESC E=RESET*	Normal resetting.
	HP ESC E=F/F	Form feeds a printable page only.
DPX FF SUP. MODE	DPX SUP. =NOMAL*	Deletes all white pages having no data.
	DPX SUP. =SPEC.	Deletes only the page that both sides of paper is white.
COPY PAGES	COPY PAGES=ON*	OFF: 1 page is fixed for the copy page number.
	COPY PAGES=OFF	
JOB TIMEOUT SEL	TIMEOUT=ON*	PJL JOB TIMEOUT is effective.
	TIMEOUT=OFF	PJL JOB TIMEOUT does not carry out.
PICKUP RETRY SET	PICKUP RETRY=2* (0-7)	
PICKUP RETRY SET	TIME OUT=???sec	
PSCOPYPAGE	PSCOPYPAGE=L3*	Changes the PS copypage operator from Level3 to Level2.
	PSCOPYPAGE=L2	
1JOB1PAGE SEL	1JOB1PAGE=SX*	Duplex=ON makes the printing speed of 1 page of data faster. Sets up the printing mode. (Simplex/ Duplex)
	1JOB1PAGE=DX	
APPLEUSBPS	BINARY=OFF*	Enables to print PS Pure Binary data via Mac USB.
	BINARY=ON	
MP CAS ADJUST	MPTRAY YADJUST	Adjusts the position of starting scanning in each paper tray. -50 to 50 dot (300dpi)
	PCTRAY YADJUST	
	DUPLEX YADJUST	
	MPTRAY XADJUST	Adjusts the position of starting scanning in each paper tray. -100 to 750 dot (300dpi)
	TRAY1 XADJUST	
	TRAY2 XADJUST	
	TRAY3 XADJUST	
	DUPLEX XADJUST	
NET HEAP SIZE	HEAPSIZE=xxxxK*	Changes the size of the beep area used on Web. Allows you to change the size by 15 degrees. (The value from 0 to 14 is stored in the NVRAM internally.)
PS FONT CACHE	CLEAR CACHE=OFF*	Controls whether the font cache is cleared or not when finishing a job in the PS emulation. When setting to OFF, the font cache is not cleared and is enabled for the next job. When setting to ON, the font cache is cleared and disabled for the next job.
	CLEAR CACHE=ON	

Title & Subtitle	Item to be Set	Description
TONER LOW Changes the timing when the toner low error is detected.	TONERLOW=ON*	Checks toner with the duty level of 2%. (Default)
	TONERLOW=DELAY	Checks toner with the duty level of 8%.
	TONERLOW=OFF	Does not detect the toner low error.
T1 MEDIA FIX Selects the media type of Tray1. The default setting is OFF. When fixing the media to any type of setting, the printer ignores the media type set in the print data (driver) and prints with the media type set in the printer.	T1 FIX=OFF*	The media type of Tray1 follows the one set in the print data.
	T1 FIX=PLAIN	Fixes the media of Tray1 to plain paper.
	T1 FIX=TRANS.	Fixes the media of Tray1 to transparencies.
	T1 FIX=THIN	Fixes the media of Tray1 to thin paper.
	T1 FIX=BOND	Fixes the media of Tray1 to bond paper.
	T1 FIX=RECYCLED	Fixes the media of Tray1 to recycled paper.
T2 MEDIA FIX Selects the media type of Tray2. The default setting is OFF. When fixing the media to any type of setting, the printer ignores the media type set in the print data (driver) and prints with the media type set in the printer.	T2 FIX=OFF*	The media type of Tray2 follows the one set in the print data.
	T2 FIX=PLAIN	Fixes the media of Tray2 to plain paper.
	T2 FIX=TRANS.	Fixes the media of Tray2 to transparencies.
	T2 FIX=THIN	Fixes the media of Tray2 to thin paper.
	T2 FIX=BOND	Fixes the media of Tray2 to bond paper.
	T2 FIX=RECYCLED	Fixes the media of Tray2 to recycled paper.
T3 MEDIA FIX Selects the media type of Tray3. The default setting is OFF. When fixing the media to any type of setting, the printer ignores the media type set in the print data (driver) and prints with the media type set in the printer.	T3 FIX=OFF*	The media type of Tray3 follows the one set in the print data.
	T3 FIX=PLAIN	Fixes the media of Tray3 to plain paper.
	T3 FIX=TRANS.	Fixes the media of Tray3 to transparencies.
	T3 FIX=THIN	Fixes the media of Tray3 to thin paper.
	T3 FIX=BOND	Fixes the media of Tray3 to bond paper.
	T3 FIX=RECYCLED	Fixes the media of Tray3 to recycled paper.
DEF PCL ERRPRT Sets the default value of PCL error print. The setting value is reflected on the setting value of PCL error print when implementing PJL initialization or factory reset.	DEF ERRPRT=AUTO*	Identifies the model and determines the default value automatically. LED model: ON LCD model: OFF
	DEF ERRPRT=OFF	Sets the default value of PCL error print to OFF.
	DEF ERRPRT=ON	Sets the default value of PCL error print to ON.

2.2 Reset Parts Life Menu

The reset parts life menu is used when the service personnel replace the periodical maintenance parts.

<LED model>

(1) Check that the printer is turned on the power.

(2) Double-click the brmainte.exe file (maintenance utility) which has been copied in the "hl5300" folder to start.

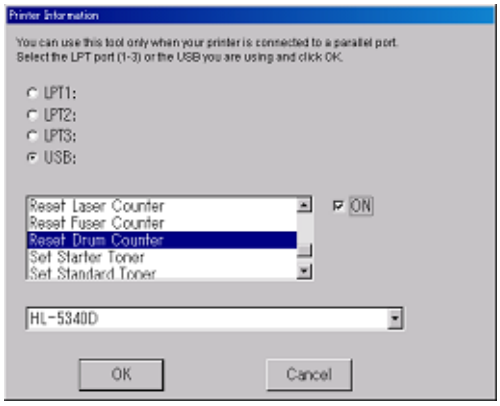

(3) Select "Input Information" from Menu. Select the applicable model name.

(4) Check the port (USB) that the printer is connected through and click the applicable item (part name) in the lower box.

Parts life reset items

- Drum counter
- Fuser counter
- Laser counter
- PF kit 1/2/3/MP counter

(5) Check ON in the check box at the right hand side.

(6) Click the [OK] button in the end. All of the settings are completed.
Turn the power supply of the machine off.

<LCD model>

(1) Press the [Go] and [+] buttons at the same time.

(2) Select the required item (part name) using [+/-] buttons, then press the [Set] button to reset.

< Function Table >

Title	Item to be Set	Description
Reset Parts Life Menu	DRUM UNIT	Initializes the drum unit remaining life.
	PF KIT MP	Initializes the paper feeding kit remaining life. PF kit MP/1/2/3 = Paper feeding kit of the MP tray/tray 1/tray 2/tray 3
	PF KIT 1	
	PF KIT 2	
	PF KIT 3	
	FUSER UNIT	Initializes the fuser unit remaining life.
	LASER UNIT	Initializes the laser unit remaining life.

2.3 Service Menu

The main purpose of the service menu is to provide the service personnel with the printer information.

How to enter the Service Menu
Turn the machine on.

Press the [+] and [Set] buttons in this order while holding down the [Go] button.

How to access the Required Menu
Use either [+] or [-] button to scroll through the menu listing. To select an item, press the [Set] button. Then the sub-menu will appear.

Scroll through the sub menu items using the [+/-] buttons. To go back to a higher level, press the Back button.

How to exit the Service Menu
There are two options to exit the Professional Menu mode; either to press [Go] button at any sub menus, to press the [Back] button consecutively to go up roots till exiting the Service Menu.

<Function Table>

Title	Subtitle	Description
SERVICE INFO	PAGE COUNT	Displays the number of printing pages.
	JAM COUNT JAM MP TRAY JAM TRAY1 JAM TRAY2 JAM TRAY3 JAM INSIDE JAM REAR JAM DUPLEX	Displays the number of jam occurrence.
	REPLACE COUNT	
	TONER	Displays the number of the toner cartridge unit replacement.
	DRUM UNIT	Displays the number of the drum unit replacement.
	PF KIT MP	Displays the number of the PF kit replacement. PF kit MP/1/2/3 = PF kit for MP Tray / Tray1 / Tray2 / Tray3.
	PF KIT 1	
	PF KIT 2	
	PF KIT 3	
	FUSER UNIT	Displays the number of the fuser unit replacement.
	LASER UNIT	Displays the number of the laser unit replacement.
	COVER AGE (TOTAL)	Displays the accumulated coverage (when printing Letter size paper at 100% print coverage).
	COVER AGE (CUR)	Displays the coverage of toner during use (when printing Letter size paper at 100% print coverage).

Title	Subtitle	Description
SERVICE INFO	PRINT PAGES	Displays the number of pages when printing each paper size. PRINT PAGES counter will be effective until it counts up to 100,000 pages for each paper size.
	A4/LTR PAGE	Number of prints for A4/LTR: A4, Letter.
	LGL/A4LONG PAGE	Number of prints for LGL/A4LONG: Legal, A4 long, FOLIO.
	B5/EXE PAGE	Number of prints for B5/EXE: ISO B5, JIS B5, EXECUTIVE.
	ENVELOPE PAGE	Number of prints for C5, COM10, DL, DLL, MONARCH.
	A5 PAGE	Number of prints for A5/A5L.
	OTHER PAGE	OTHER: Other paper than the ones described above.
	TRAY PRINT PAGES	Number of prints for each toner.
	MP TRAY	Number of prints for MP tray.
	TRAY 1	Number of prints for Tray 1.
	TRAY 2	Number of prints for Tray 2.
	TRAY 3	Number of prints for Tray 3.
	DX unit	Number of prints for duplex.
	MEDIA PRINTPAGES	Number of prints for each media type.
	PLN/THIN/RECYCLE	Number of prints for Plain/Thin/ Recycled.
	TRANSPARENCIES	Number of prints for Transparencies.
	THIN/THIKER/BOND	Number of prints for Thinck/Thicher/ Bond.
	EV/E.THIK/E.THIN	Number of prints for Env/Env.Thick/ Env.Thin.
	POWER ON TIME	Time of accumulated energization.
	POWER ON COUNT	Count of accumulated energization.
ERROR HISTORY	1:####### 2:####### 3:####### …… 10:#######	Displays the 10 latest errors in order of newest to the oldest.

Title	Subtitle	Description
LIFE PERIOD	DRUM UNIT	Displays the drum unit life period. (page)
	PF KIT	Displays the PF kit life period. (page)
	FUSER UNIT	Displays the fuser unit life period. (page)
	LASER UNIT	Displays the laser unit life period. (image)
DRUM LIFE CHK %		Sets up the timing of showing "CHANGE DRUM SOON" message. Default setting: 90%, Setting range: 1 to100%
MODIFY COUNT (When setting the number of remaining life, the cursor moves to upper digits every time the [Set] button is pressed. The counter is set by pressing the [Set] button when the cursor is placed at the top digit.)	JAM COUNT	Displays the total number of paper jam occurrence.
	JAM MP TRAY JAM TRAY1 JAM TRAY2 JAM TRAY3 JAM INSIDE JAM REAR JAM DUPLEX	The number of paper jam occurrence can be changed only to 0. (Reset only)
	REPLACE COUNT	
	TONER	Displays the number of the toner cartridge replacement.
	DRUM UNIT	Displays the number of the drum unit replacement.
	PF KIT MP	Displays the number of the PF kit replacement. PF kit MP/1/2/3 = PF kit for MP Tray / Tray1 / Tray 2 / Tray 3.
	PF KIT 1	
	PF KIT 2	
	PF KIT 3	
	FUSER UNIT	Displays the number of the fuser unit replacement.
	LASER UNIT	Displays the number of the laser unit replacement.
	REMAIN LIFE	
	DRUM UNIT	Displays the drum unit remaining life counters. (page)
	DRUM UNIT2	Displays the drum unit remaining life counters. (rotation)
	PF KIT MP	Displays the PF kit remaining life counters. PF kit MP/1/2/3 = PF kit for MP Tray / Tray1 / Tray 2 / Tray 3.
	PF KIT 1	
	PF KIT 2	
	PF KIT 3	
	FUSER UNIT	Displays the fuser unit remaining life counters.
	LASER UNIT	Displays the laser unit remaining life counters.

Title	Subtitle	Description
RESET COUNT	CLEAR COVERAGE	Initialize average coverage counter of toner during use.
	CLEAR ERROR HIST	Initialize error history.
NV-RAM DEBUG	NV-RAM HEX PRINT	Prints NV-RAM HEX dump.
PPDS SUBSET	ON/OFF	Supports the PPDS Subset command in the FX Emulation mode.
TEST MENU	FAN TEST	Carries out movement test of FANs.
	FAN 1=ON/OFF*	Carries out movement test of main fan, LVPS fan.
	MOTOR TEST	
	MAIN MOTOR= ON/OFF*	Carries out movement test of main motor.
	SCAN MOTOR= ON/OFF*	Carries out movement test of scanner motor.
	SENSOR TEST	
	FRONT COVER= ON/OFF	Front cover sensor (ON: Close)
	T1 KOUTAN=ON/OFF	T1 tail edge sensor
	T2 KOUTAN=ON/OFF	T2 tail edge sensor
	T3 KOUTAN=ON/OFF	T3 tail edge sensor
	REGI-MAE=ON/OFF	Regist front sensor
	REGI-ATO=ON/OFF	Regist rear sensor
	EJECT=ON/OFF	Paper eject sensor
	T1 PAPER=ON/OFF	Tray 1 paper sensor
	T2 PAPER=ON/OFF	Tray 2 paper sensor
	T3 PAPER=ON/OFF	Tray 3 paper sensor
	MP PAPER=ON/OFF	MP Tray paper sensor
	DX UNIT=ON/OFF	The DX unit is closed. (ON: Close)
	REAR COVER= ON/OFF	Back cover sensor (ON: Close)
	NEW TONER= ON/OFF	New toner sensor
	T2 CONNECT= ON/OFF	Tray 2 connect sensor
	T3 CONNECT= ON/OFF	Tray 3 connect sensor
	T4 CONNECT= ON/OFF	Tray 4 connect sensor
	TONER=ON/OFF	Toner sensor (ON: Light reception)

Title	Subtitle	Description
MAINTENANCE PRINT		Always prints the maintenance and consumable parts information on the second page of the Print Settings. <Developing Bias: xxx V> is added to the end of the page. The xxx characters show 400 V when the developer counter is 0 page, and it is designed that they are changed gradually from 400V to 300V at 4,000 pages (for standard cartridge) or 7,000 pages (for high yield cartridge). They remain 300V after 4,000 pages (for standard cartridge) or 7,000 pages (for high yield cartridge).

3. OTHER SERVICE FUNCTIONS

3.1 Wireless LAN setting (Wireless LAN model)

When the machine is in a standard state, you can switched to the Effective/Invalidity of the wireless LAN setting by pressing the [Go] button for 10 seconds. At the same time, switched to the Effective/Invalidity of the wired LAN setting. It is switched to a set value opposite to a current set value, whenever switching, and then the wireless network information (Net Config) printing is implement.
Check that which of wireless LAN or wired LAN became effective. Judge by the Active or Inactive from “Node Type” which is mentioned in “Net Config” of “Printer Settings”.

3.2 Drum condensation countermeasure mode

The printing spots may occur with the condensation of the surface of the drum in the high humidity environment. When the drum condensation countermeasure mode is set to ON to follow the procedure described below, you can remedy the condensation of the surface of the drum in drying by heat of the fuser unit.

<Operating Procedure>

(1) Open the front cover.

(2) Turn ON the power switch.

(3) Press the [Go] button three times or seven times. The drum condensation countermeasure mode is set to ON.

- The drum condensation countermeasure mode is set to OFF, when perform to the above operation in the state of that the drum condensation countermeasure mode is set to ON.
- You can check the ON/OFF of the drum condensation countermeasure mode by the number of times for the LED blinking after performing the procedure (3).

  Drum condensation countermeasure mode is set to ON: blinking once

  Drum condensation countermeasure mode is set to OFF: blinking twice

Blinking LED

LED model: All LEDs

LCD model: Data LED

3.3 Print Settings

If you want to know the drum unit life or the number of printed pages, you should print out the Print Settings.

Contents overview:
The "Print Settings" is configured with four pages for HL-5370DW and three pages for other models.

All pages have following terms in common:

* Title

* Model name

* Serial number

The setting indication is the same as the panel setting information, supporting 17 languages.

(ENG / FRE / GER / DUT / ITA / SPA / NOR / FIN / DAN / POR / SWE / CZE / POL / HUN / RUS / BUL / RUM)

The descriptions on the third page or later are indicated in English only.

<Procedure to print out the printer settings>

- The descriptions printed in Print Settings vary depending on the countries.
- It is also allowed you to print the print settings by pressing the [Go] button three times continuously when the front cover is closed and when the printer is in the ready mode.
- Select Information, then Print Settings by pressing the Set button three times. (LCD model)

PRINTER SETTINGS(1/3)

HL-5380DN series SER.NO=K8J000071

CONT. ROM VERSION :1.15

PAPER	USER SETTINGS
SOURCE	:AUTO
PRIORITY	:MP>T1>T2>T3
MP FIRST	:OFF
MP SIZE	:ANY
MP MEDIA FIX	:OFF
MANUAL FEED	:OFF
TRAY1 SIZE	:ANY
DUPLEX	:OFF

QUALITY	USER SETTINGS
RESOLUTION	:600 DPI
TONER SAVE	:OFF
DENSITY	:0

SETUP	USER SETTINGS
LANGUAGE	:ENGLISH
PANEL CONTROL	
-LCD DENSITY	:0
-AUTO ONLINE	:ON
-BUTTON REPEAT	:0.1 SEC
-MESSAGE SCROLL	:LEVEL 1
SLEEP TIME	:1 MINUTE
AUTO CONTINUE	:OFF
LOCK PANEL	:OFF
REPRINT	:OFF
PAGE PROTECTION	:AUTO
EMULATION	:AUTO(EPSON)
KEEP PCL	:OFF
RAMDISK SIZE	:0 MB

INTERFACE	USER SETTINGS
SELECT	:AUTO
AUTO IF TIME	:5 SEC
INPUT BUFFER	:LEVEL 3
PARALLEL	
-HIGH SPEED	:ON
-BI-DIR	:ON
-INPUT PRIME	:OFF

PRINT MENU	USER SETTINGS
MEDIA TYPE	:PLAIN PAPER
PAPER	:A4
COPIES	:1
ORIENTATION	:PORTRAIT
PRINT POSITION	
-X OFFSET	:0 DOTS
-Y OFFSET	:0 DOTS
AUTO FF TIME	:OFF
FF SUPPRESS	:OFF
HP LASERJET	
-FONT NO.	:I059
-FONT PITCH	:10.00
-SYMBOL SET	:PC-8
-AUTO LF	:OFF
-AUTO CR	:OFF
-AUTO WRAP	:OFF
-AUTO SKIP	:ON
-LEFT MARGIN	:0
-RIGHT MARGIN	:78
-TOP MARGIN	:0.50
-BOTTOM MARGIN	:0.50
-LINES	:64
EPSON FX-850	
-FONT NO.	:I059
-FONT PITCH	:10.00
-CHARACTER SET	:US ASCII
-AUTO LF	:OFF
-AUTO MASK	:OFF
-LEFT MARGIN	:0
-RIGHT MARGIN	:80
-TOP MARGIN	:0.33
-BOTTOM MARGIN	:0.33
-LINES	:66
IBM PROPRINTER	
-FONT NO.	:I059
-FONT PITCH	:10.00
-CHARACTER SET	:PC-8
-AUTO LF	:OFF
-AUTO CR	:OFF
-AUTO MASK	:OFF
-LEFT MARGIN	:0
-RIGHT MARGIN	:80
-TOP MARGIN	:0.33
-BOTTOM MARGIN	:0.33
-LINES	:66
BR-SCRIPT3	
-ERROR PRINT	:ON

PRINTER SETTINGS(2/3)

HL-5380DN series SER.NO=K8J000071

CONT. ROM VERSION :1.15

RAM SIZE : 32Mbyte

Remaining life of :

PF KITMP	50000
PF KIT 1	99997
FUSER	99997
LASER	99997
*DRUM	24996
**TONER	

0% 100%

<Device Status>
Page Count:3

<Total Pages Printed>
MP TRAY:0
TRAY1:3
TRAY2:0
TRAY3:0
DUPLEX TRAY:0

<Total Pages Printed>
A4/LETTER:3
LGL/A4LONG/FOLIO:0
B5/EXECUTIVE:0
ENVELOPE:0
A5:0
OTHERS:0

<Total Pages Printed>
PLAIN/THIN/RECYCLED:3
TRANSPARENCIES:0
THICK/THICKER/BOND:0
ENVELOPES/ENV.THICK/ENV.THIN:0

<Total Paper Jams:0 >
JAM MP TRAY:0
JAM TRAY1:0
JAM TRAY2:0
JAM TRAY3:0
JAM INSIDE:0
JAM REAR:0
JAM DUPLEX:0

<Error History (last 10 errors)>
1:
2:
3:
4:
5:
6:
7:
8:
9:
10:

<Replace Count>
PF KITMP:0
PF KIT 1:0
PF KIT 2:0
PF KIT 3:0
FUSER:0
LASER:0
DRUM:0
TONER:0

* Based on A4/Letter printing.
**Remaining life will vary depending on the types of documents printed.

PRINTER SETTINGS(3/3)

HL-5380DN series SER.NO=K8J000071

```
<<NETWORK CONFIGURATION>>

<Node Type>                 Brother NC-6800h
<Node Firmware Ver.>        Firmware Ver.0.20 (08.09.08)
<MAC Address>               00-1b-a9-00-04-0e
<Node name>                 BRN001BA900040E

<Active services>           BRN001BA900040E
                            BINARY_P1
                            TEXT_P1
                            POSTSCRIPT_P1
                            PCL_P1
                            BRN001BA900040E_AT

<Protocols>
 TCP/IP          Enabled          IPv6                Disabled
 NetBIOS/IP      Enabled          APIPA               Enabled
 LegacyAuth      Enabled          WebBasedManagement  Enabled
 Telnet          Enabled          SNMP                Enabled
 LPD             Enabled          Raw Port            Enabled
 IPP             Enabled          WebServices         Enabled
 POP3/SMTP       Enabled          FTP                 Enabled
 TFTP            Enabled          mDNS                Enabled
 LLMNR           Enabled          LLTD                Disabled

<IP Settings>
 IP Address                 0.0.0.0
 Subnet Mask                0.0.0.0
 IP Gateway                 0.0.0.0
 Boot Method                AUTO
 Boot Tries                 3
 IP Filter                  Disabled

 GW Timeout (sec)           5
 DNS Address Config         AUTO
 Primary DNS Server         0.0.0.0
 Secondary DNS Server       0.0.0.0

<NetBIOS Name>              BRN001BA900040E
<WINS Address Config>       AUTO
<Primary WINS Server>       0.0.0.0
<Secondary WINS Server>     0.0.0.0

<Printer Mail Address>      brn001ba900040e@example.com
<SMTP Server>               0.0.0.0
<SMTP Port>                 25
<POP3 Server>               0.0.0.0
<POP3 Port>                 110

<mDNS Service Name>         Brother HL-5380DN series

<WebServices Name>          Brother HL-5380DN series [001ba900040e]

<Certificate>
 Status                     None

<SNMP Settings>
 Communication Mode         v1/v2c(RW)

<Ethernet Link Mode>        Auto
<Ethernet Link Status>      Link DOWN, 10baseT  #Link drops=0

<Network Statistics>
Packets Received            0
Bad Packets Received        0
Receiver overruns           0
Packets Transmitted         0
Transmit packet fail        0
Packet Collisions           0
```


Confidential

<Page 1>

This page includes various setting information of the printer. Each term is indicated when it fulfills the condition.

<Page 2>

This page includes the printer and maintenance information in the following order.

(1) Printer information

The following terms are indicated in the order.

- Controller version (CONT.ROM VERSION)
- RAM SIZE (Mbyte)

(2) Maintenance information

1) Consumable information

The printable pages remained for the consumable part is indicated. Also, the percentage of life remained over the total printable pages is indicated in numerical value and band graph.

A sample (PF KIT MP) is as follows:

From the top left, the consumable part name, number of printable pages remained, and percentage of life remained are indicated. The right column is a band graph separated into 50 scale marks.

The consumable part indicated is as follows:

- PF KIT MP
- PF KIT 1
- PF KIT 2 (indicated only when the Tray2 is installed.)
- PF KIT 3 (indicated only when the Tray3 is installed.)
- FUSER
- LASER
- DRUM
- TONER

<How to Read the Drum Unit Life>

The drum unit life is shown by the band graph at the center of Print Settings;

- It initially indicates 100% and gradually decreases.
- It indicates 0% when the **Drum** LED is blinking.
- It stays at 0% even if further printing is done.

<The difference of the Drum Unit Life and the Drum Counter>

The drum unit life is based on the page counter. If the average number of drum rotations is more than the number of drum rotations in non-continuous printing, however, the drum unit life is counted by the number of drum rotations.

Since the drum counter printed in Print Settings is an actual page counter after a new drum unit is replaced, the drum unit life may be different from the drum counter.

2) Counter information, history information

The counter and history information related to the following term are included. When it reaches the maximum count, each term is no longer counted.

- Page counter

  The total number of pages printed. The maximum count is 1 million pages.

- Total pages printed (TRAY)

  The number of times that each of the Tray1, Tray2, Tray3, MP tray and Duplex unit is used. (For the Duplex unit, the number of times is printed only for the models supporting the Duplex unit.
  HL-5370DW.)

  The maximum count for each item is 1 million times.

  The information above is not cleared when replacing the PF kit.

- Total pages printed (PAPER)

  The number of A4/Letter, A4Long/Legal/Folio, B5/Excutine, Envelope, A5 and other paper types used. The maximum count for each item is 1 million times.

- Total paper jams

  The number of paper jam occurrence in each of the Tray1, Tray2, Tray3, MP tray and Duplex unit. (For the Duplex unit, the number of occurrence is printed only for the models supporting the Duplex unit.

  The paper jam which occurs when the printer is turned ON is not counted.

  The maximum count for each item is 255 times.

- Error history

  The error history including the 10 latest errors and the number of pages when these errors occur are indicated. The errors such as Cover Open, Manual Feed, No Paper XX and No Tray XX are not included. The list is updated until the 1 millionth error occurs, and it is not even when more than 1 million errors occur.

  The page counter when each error occurred is also indicated.

- Replace count

  The number of replacement of each of the drum unit, toner cartridge, PF Kit, Tray 1/2/3, MP tray, fuser unit and laser unit. The maximum count for each item is 65535 times.

<Page 3>

This page includes various wired network settings information of the printer.

<Page 4> (HL-537DW only)

This page includes various wireless network settings information of the printer.

Confidential

CHAPTER 8

CIRCUIT DIAGRAMS, WIRING DIAGRAM

CHAPTER 8 CIRCUIT DIAGRAMS, WIRING DIAGRAM

This chapter provides the circuit diagrams of the High-voltage power supply PCB and LVPS PCB and the wiring diagrams that help you understand the connections between PCBs.

CONTENTS

1. CIRCUIT DIAGRAMS.....8-1
2. WIRING DIAGRAM 8-4

1. CIRCUIT DIAGRAMS

■ High-voltage Power Supply PCB Circuit Diagram

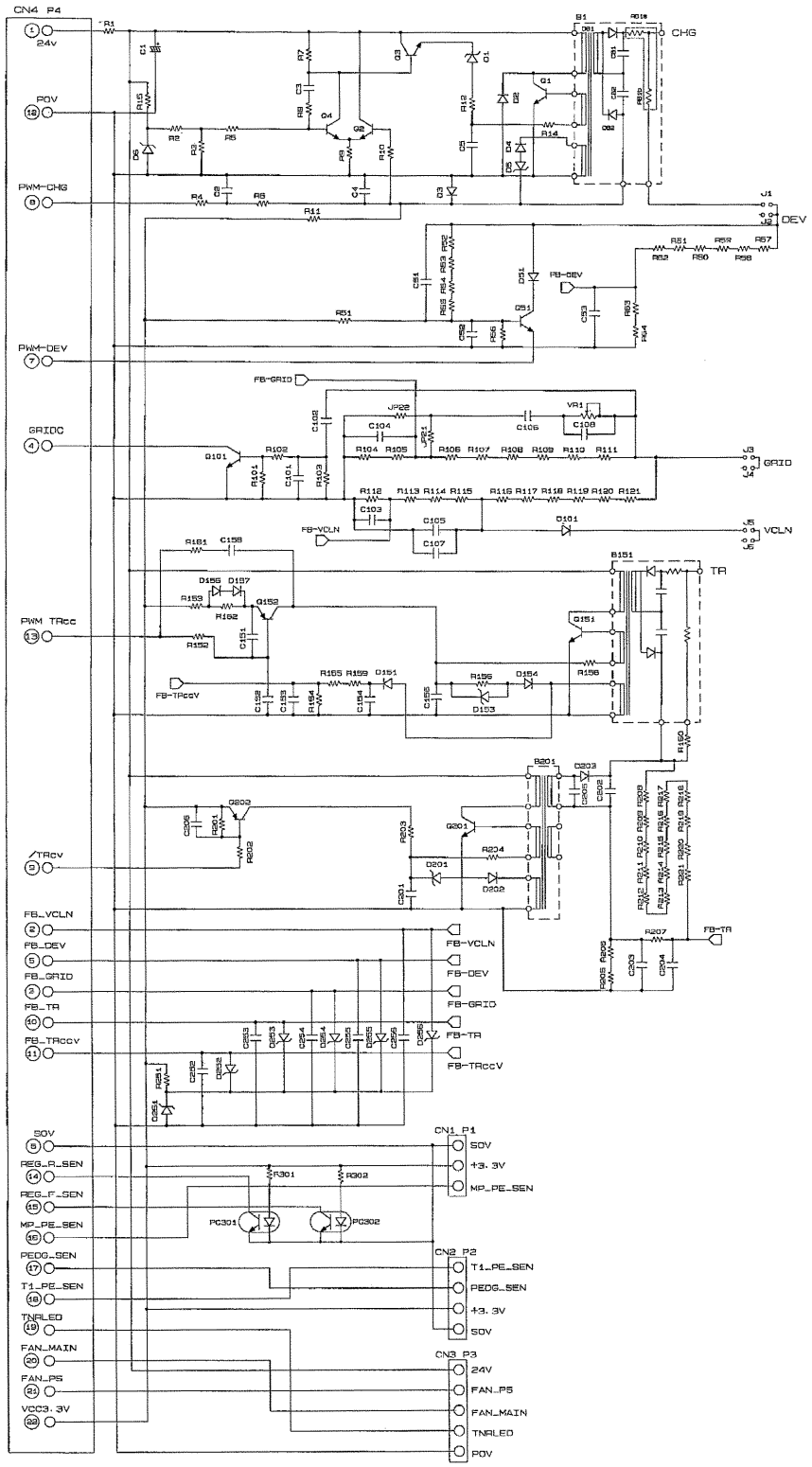

Fig. 8-1

Confidential

■ LVPS PCB Circuit Diagram (230V)

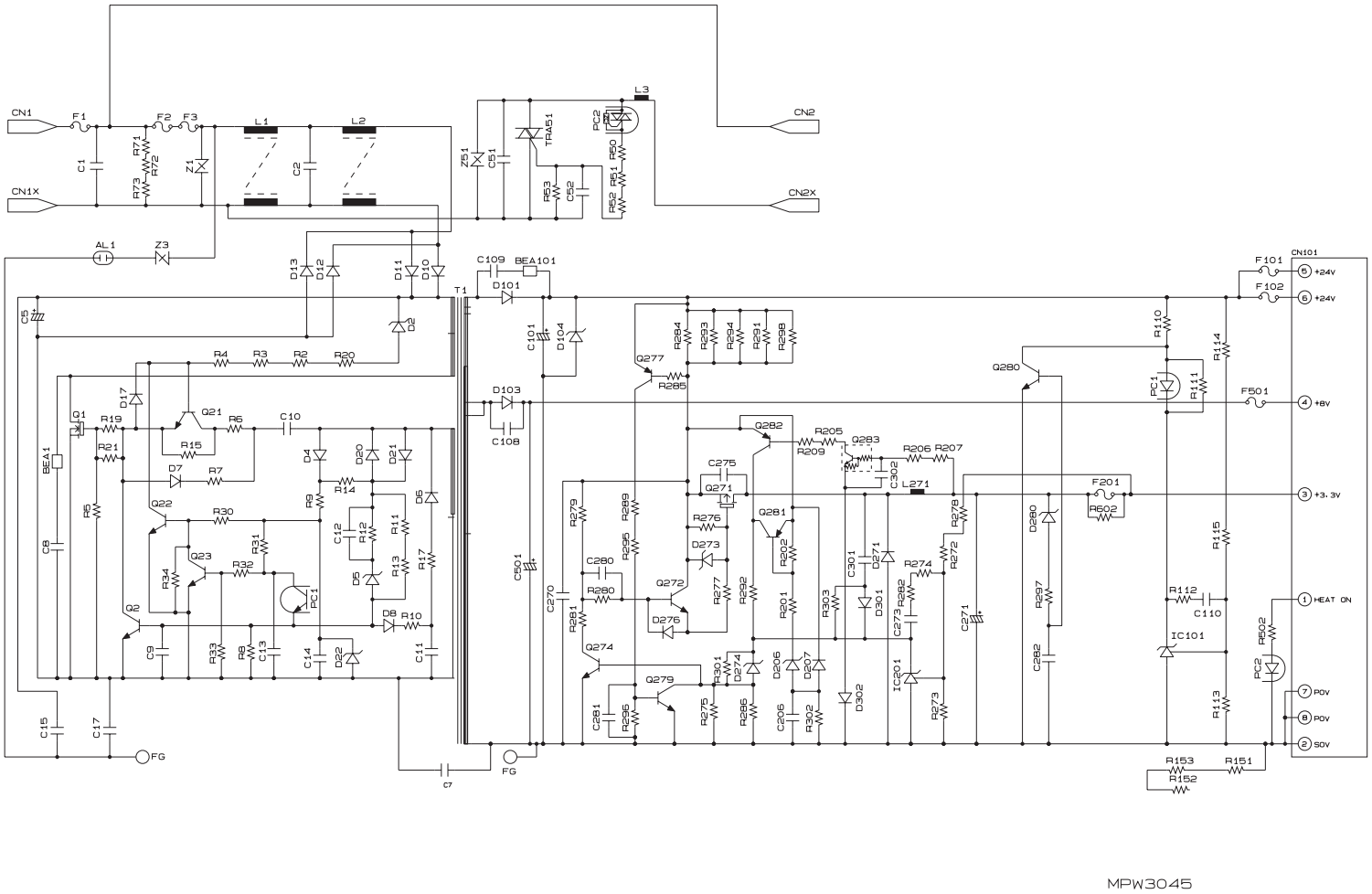

Fig. 8-2

Confidential

■ LVPS PCB Circuit Diagram (115V)

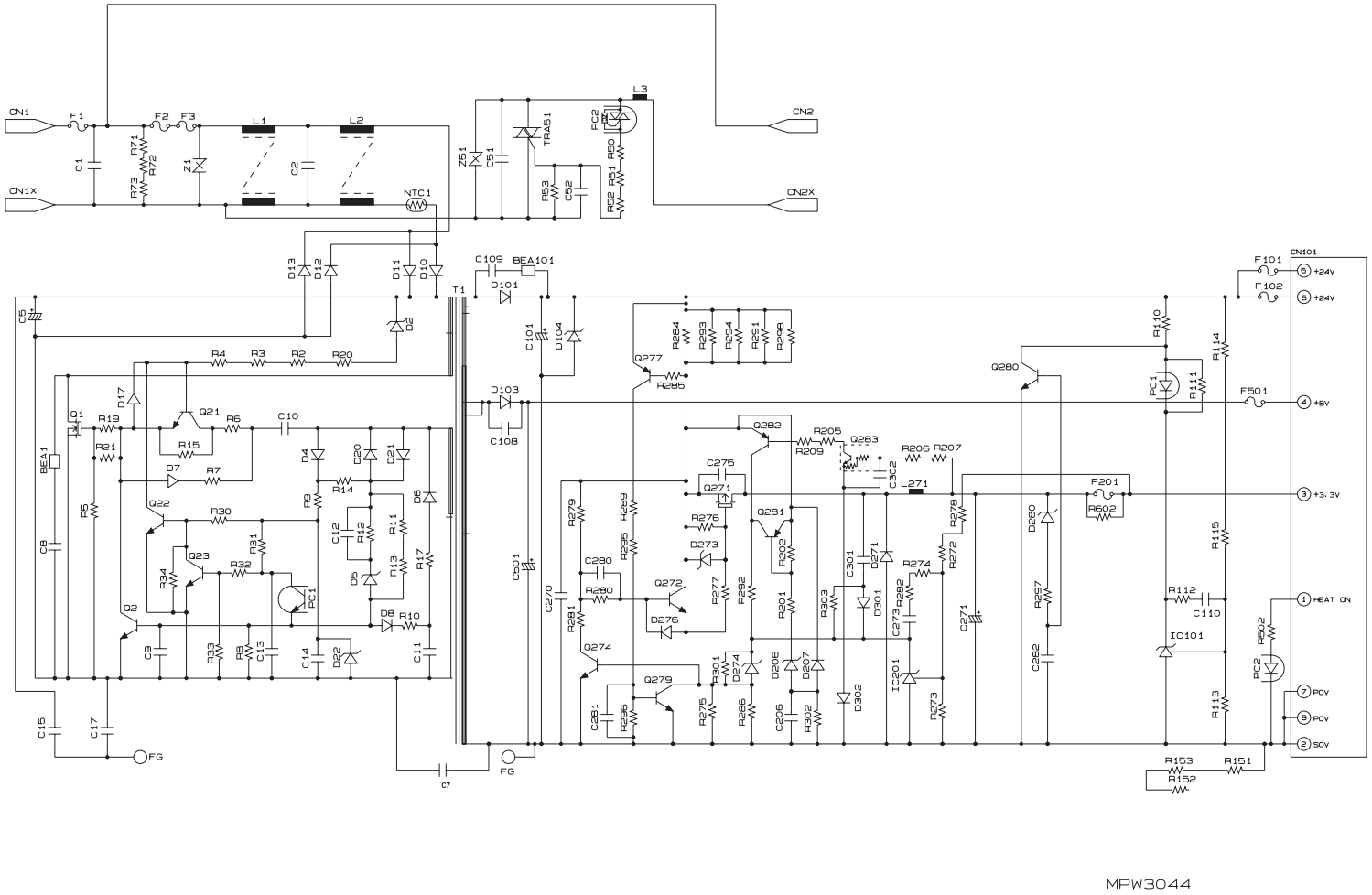

MPW3044

Fig. 8-3

Confidential

2. WIRING DIAGRAM

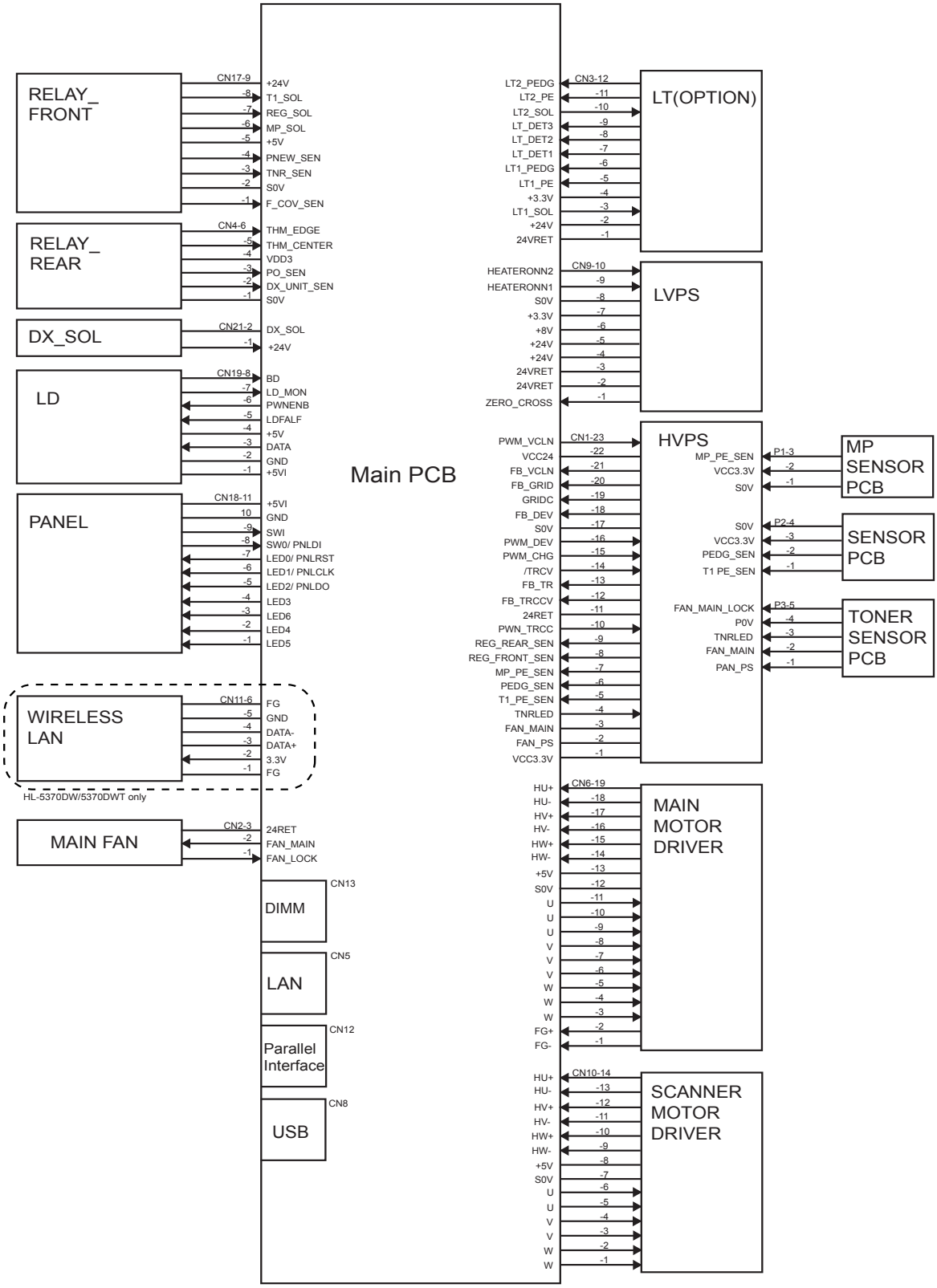

Fig. 8-4

Confidential

APPENDIX 1
FIRMWARE SWITCHES (WSW)

This appendix describes the functions of the Firmware switches. Use the Firmware switch to match the environmental conditions if the machine malfunctions due to mismatching.

FIRMWARE SWITCHES (WSW)

There is not function of the firmware switch in this machine.

Confidential

APPENDIX 2

DELETION OF USER SETTING INFORMATION, etc.

This appendix describes how to delete User setting information, etc.

DELETION OF USER SETTING INFORMATION, etc.

User setting such as wired and wireless network settings in the machine is recorded in the EEPROM and the Flash memory on the Main PCB. Follow the procedure described below to delete this information with a single operation.

- **Net-related information**
- **Macro font**
- **User setting information**

<Operating Procedure>

(1) Close the front cover and turn ON the power switch while holding down the [Go] button.

(2) LED model
All LEDs light up while holding down the [Go] button, then check that the **Status** LED is off, and release the [Go] button, then all LEDs are off.

LCD model
The back light LCD becomes the orange while holding down the [Go] button, then check that the **"USERS MODE"** appear on the LCD, and release the [Go] button, then the **Data** LED is off.

(3) Press the [Go] button 10 times.

(4) All LEDs go off, then the personal information is deleted and return to the ready status.

Confidential

APPENDIX 3
SERIAL NUMBERING SYSTEM

This appendix describes the meaning of the serial number and property codes and the location of each label.

SERIAL NUMBERING SYSTEM

Each machine has a serial number label for the machine itself and property labels for some other parts. Refer to the information below for the meaning of the serial number and property codes and the location of each label.

■ Serial number labels for the machine itself

<How to Read>

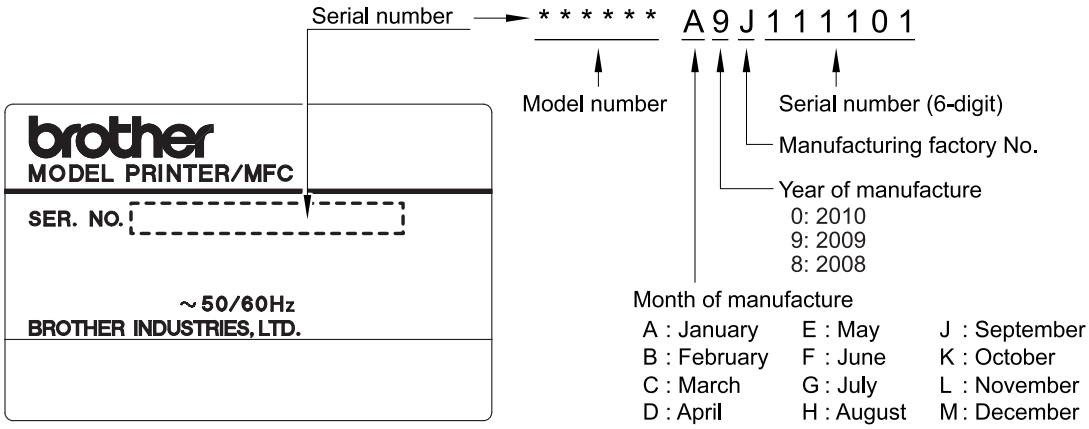

Fig. App. 3-1

<Location>

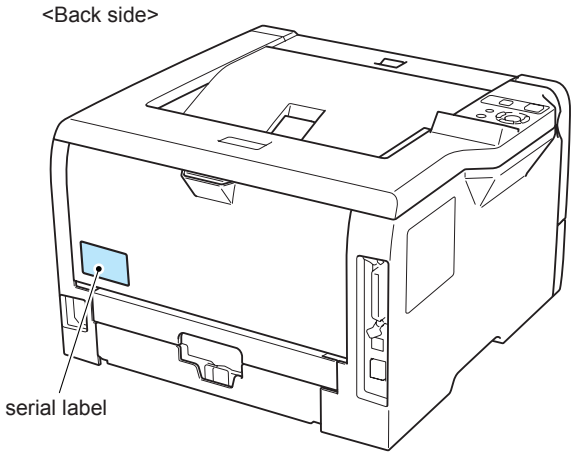

Fig. App. 3-2

Confidential

APPENDIX 4
SCREW CATALOGUE

This appendix describes the used all screws in this machine by actual size. Use this appendix when lose the screw type.

SCREW CATALOGUE

Taptite bind B

Taptite bind B M3x8	
Taptite bind B M3x10	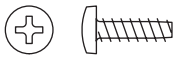
Taptite bind B M4x12	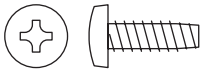

Taptite cup B

Taptite cup B M2x6	
Taptite cup B M3x8	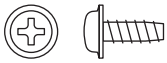
Taptite cup B M3x10	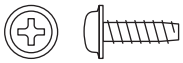
Taptite cup B M3x12	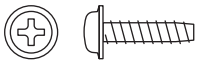
Taptite cup B M4x10	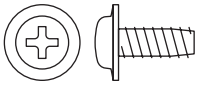

Taptite pan (washer)

Taptite pan (washer) B M3x8	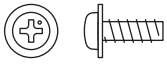
Taptite pan (washer) B M4x20	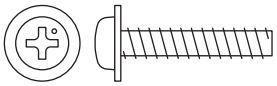

Taptite cup S

Taptite cup S M3x6	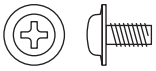
Taptite cup S M3x6 SR	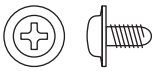

Screw pan (S/P washer)

Screw pan (S/P washer) M3.5x6	

Screw

Screw M2x6	

Confidential

APPENDIX 5
REFERENCES

This page provides the retrieve information. It is possible to get the instruction of the subject by just clicking on the link next page..

REFERENCES

This page provides reference information. It is possible to get the full instructions of the subjects by just clicking on the links below.

1. Machine specification

(Refer to "2. SPECIFICATIONS LIST" in Chapter 1)

2. Paper specification

(Refer to "2.6 Paper" in Chapter 1)

3. Message indication

(Refer to "2. DISTINGUISH ERROR CAUSE" in Chapter 3)

4. Diameter of rollers

(Refer to "4.2 Diameter of Rollers" in Chapter 3)

5. Parts life reset

(Refer to "2.2 Reset Parts Life Menu" in Chapter 7)

APPENDIX 6
GLOSSARY

This appendix describes the manual specific acronyms and technical terms are used in addition to the generally used ones. The next page contains typical acronyms and technical terms that are used throughout these manuals.

GLOSSARY

■ ACRONYMS AND TECHNICAL TERMS

In this Service Manual, the manual specific acronyms and technical terms that are used in addition to the generally used ones. The table below contains typical acronyms and technical terms that are used throughout this manual.

APIPA	Automatic Private IP Addressing
ASIC	Application Specific Integrated Circuit
ASSY	Assembly
CN	Connector
CPU	Central Processing Unit
dB	decibel
DEV	Development
DIMM	Dual Inline Memory Module
dpi	dots per inch
DX	Duplex
EEPROM	Electronically Erasable and Programmable Read Only Memory
FR	Feed Roller
FU	Fuser
HEX	Hexadecimal
HUM	Humidity
HV	High Voltage
HVPS	High Voltage Power Supply
IEEE 1284	Institute of Electrical and Electronic Engineers 1284
IF	Interface
IPv4	Internet Protocol Version 4
IPv6	Internet Protocol Version 6
LB	Left Bottom
LCD	Liquid Crystal Display
LD	Laser Diode
LED	Light Emitting Diode
LT	Lower Tray
LV	Low Voltage
LVPS	Low Voltage Power Supply
MP	Multi-Purpose
N/A	Not Applicable
NC*	Network Circuit
NVRAM	Nonvolatile Random Access Memory
OPC	Organic Photo Conductor
PF	Paper Feed
PP gear	Pressure Plate gear
ppm	Pages per minute
PU	Pick-Up roller

Confidential

RAM	Random Access Memory
REGI	Registration
SOL	Solenoid
SP	Spare Parts
SX	Simplex
T1	Tray 1
TE	Toner Empty
THM	Thermal
TN	Toner
TR	Transfer

* Excluding the acronym shown on the wiring diagram or circuit diagram.

Confidential